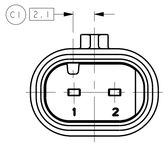

KEYING OPTION A

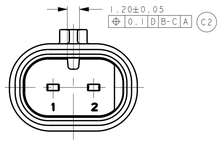

KEYING OPTION B

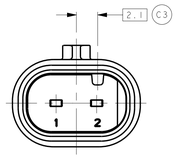

KEYING OPTION C

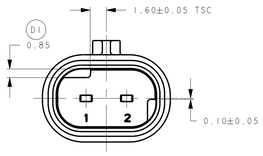

KEYING OPTION E

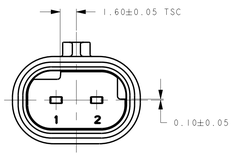

KEYING OPTION F

POLARIZATION VIEWS

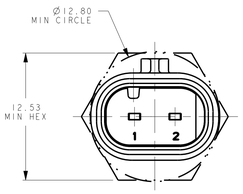

MINIMUM FIT SIZE - PROVIDED FOR INFORMATIONAL PURPOSES ONLY (BASED ON MAXIMUM MATERIAL CONDITION)

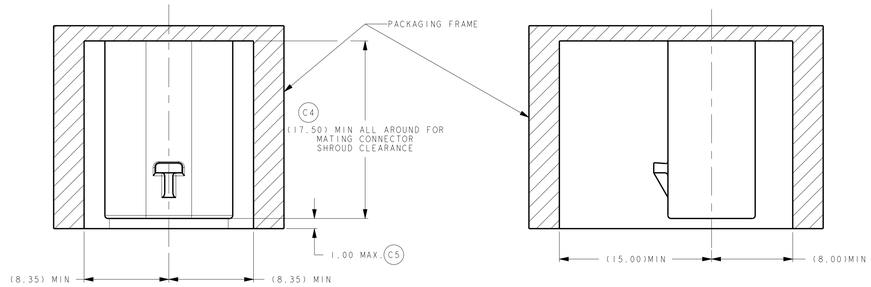

IF THE HEADER IS RECESSED INTO A POCKET, THESE DIMENSIONS REPRESENT THE MINIMUM CLEARANCE REQUIRED FOR THE MATING CONNECTOR SHROUD

C6 NOTICE

THIS DRAWING OR PORTIONS OF IT ARE CONTROLLED BY THE ELECTRICAL WIRING COMPONENTS APPLICATION PARTNERSHIP (EWCAP) A SUBGROUP OF THE UNITED STATES COUNSEL FOR AUTOMOTIVE RESEARCH LLC (USCAR LLC).

USCAR IS AN LLC CONSISTING OF MEMBERS FROM CHRYSLER GROUP, FORD MOTOR COMPANY AND GM COMPANY.

ANY CHANGE TO A EWCAP CONTROLLED PORTION OF THIS DRAWING, INCLUDING A REVISION RECORD CHANGE MUST BE APPROVED, IN WRITING, BY THE RESPONSIBLE EWCAP REPRESENTATIVE FROM EACH USCAR MEMBER COMPANY. EACH EWCAP REPRESENTATIVE AUTHORIZED TO SIGN FOR HIS OR HER MEMBER COMPANY IS RESPONSIBLE FOR OBTAINING ALL NECESSARY APPROVALS WITHIN THAT COMPANY PRIOR TO SIGNING FOR THE APPROVAL OF THE CHANGE.

EWCAP EXPRESSLY PROHIBITS ANY PARTY FROM CHANGING EITHER ANY EWCAP CONTROLLED PORTION OF THIS DRAWING OR ANY ASSOCIATED TOOLING BEFORE RECEIVING APPROVAL, SIGNED BY THE AUTHORIZED REPRESENTATIVES, OF THE USCAR MEMBER COMPANIES. REFERENCE TO THE SIGNED CHANGE NOTICE MUST BE ENTERED IN THE DRAWING CONTROL COLUMN.

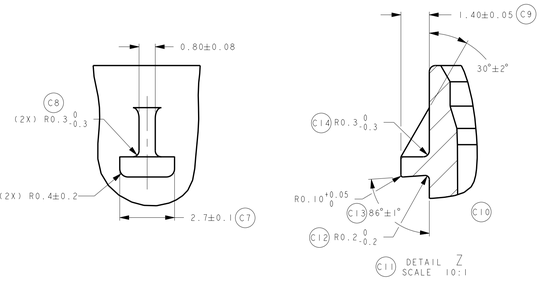

LATCH CONSTRUCTION

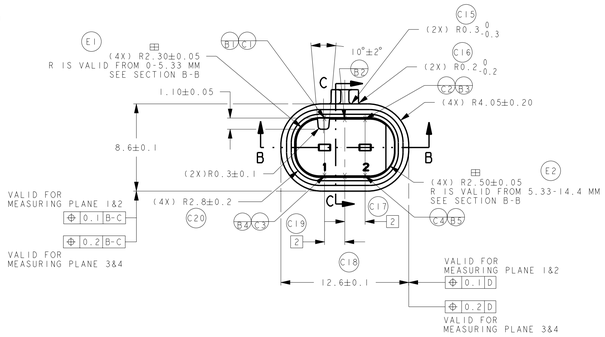

SCALE 2:1

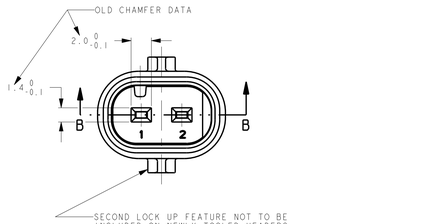

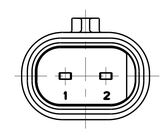

KEYING OPTION Z

THIS UNIVERSAL KEY OPTION IS NOT APPROVED BY USCAR/EWCAP FOR USE ON ORIGINAL EQUIPEMENT DEVICES. HOWEVER, THIS KEY OPTION COULD BE ENCOUNTERED ON OLDER DEVICES.

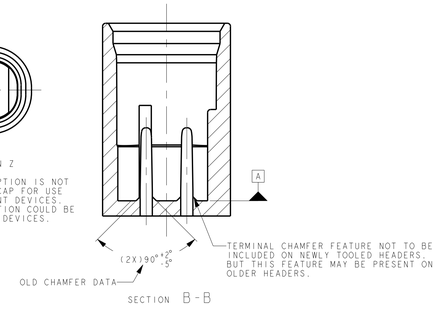

SECTION B-B

PROVIDED FOR INFORMATIONAL PURPOSES ONLY

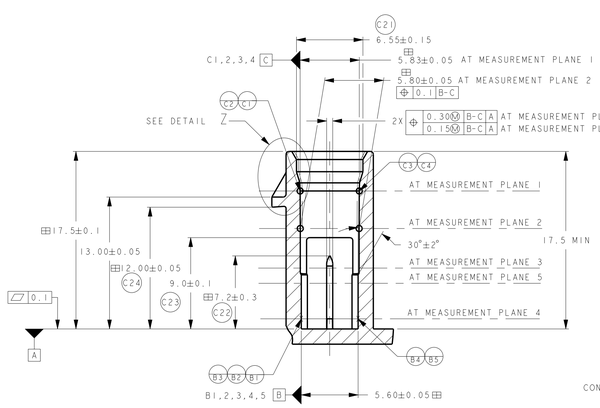

SECTION C-C

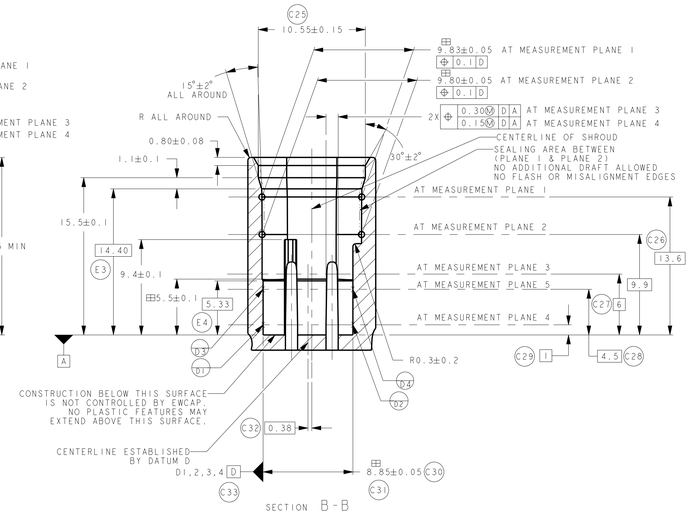

SECTION B-B

C34 NOTES:

1. ALL DIMENSIONS SHOWN IN MILLIMETERS.
2. DIMENSIONING AND TOLERANCING PER ASME Y14.5M
3. 0.25 RADII ON ALL CORNERS SHOWN SHARP.
4. ALL UNSPECIFIED RADII 0.25.
5. REFER TO "SAE/USCAR 12 CONNECTOR DESIGN CRITERIA" FOR ADDITIONAL REQUIREMENTS.
6. EXCEPT WHERE NOTED, DRAFT ON OUTSIDE SURFACES IS PERMISSIBLE WITHIN TOLERANCE.
7. SYMBOL INDICATES DRAFT DIRECTION.
8. FOR TERMINAL MATERIAL, DIMENSIONAL AND COATING REQUIREMENTS, SEE EWCAP 001 BLADE DRAWING.
9. TO CLAIM USCAR COMPLIANCE, PARTS DESIGNED AND PRODUCED TO THIS FOOTPRINT DRAWING MUST BE TESTED TO AND MEET THE REQUIREMENTS OF SAE/USCAR 2.
10. REVERSE DRAFT PERMISSIBLE IN LATCH DETAILS.
11. DENOTES DIMENSION THAT MAY BE UTILIZED TO MONITOR PART QUALITY.
12. A FULL SHROUD ON THE MATING CONNECTOR IS REQUIRED TO INSURE THE CONNECTOR-HEADER POLARIZATION FEATURES (OPTIONS A THRU F) WILL FUNCTION. THE FULL SHROUD ALSO PREVENTS SCOOP DAMAGE TO THE HEADER PINS.
13. THIS PART HAS BEEN PREVIOUSLY DESIGNED AND TOOLED WITH THE DATUM REFERENCES AS SHOWN. THE DATUM REFERENCES USED ON THIS DRAWING TAKES PRECEDENCE OVER THE EWCAP DRAWING GUIDELINE DATUM REFERNCE REQUIREMENT.

CHANGE SERIAL NUMBER	LET	REVISION RECORD	DATE	DWN	CHK
167	E	E1 WAS (4X) R2.30±0.05 E2 WAS (4X) R2.50±0.05 E3 ADDED 14.4 E4 ADDED 5.33	08-16-23	KV	SR
164	D	D1 ADDED 0.85	08-16-23	KV	SR
098	C	C1 WAS 2.10±0.05 C2 WAS 0.05 C C3 WAS 2.10±0.05 C4 ADDED (17.50) C5 ADDED 1.00 MAX C6 REVISED DISCLAIMER NOTICE C7 WAS 2.8 0/-0.2 C8 ADDED (2X)R0.3 0/-0.3 C9 WAS 1.45 0/-0.10 C10 REMOVED TEST DEVICE Ø1.50±0.01 C11 REVISED DETAIL NAME C12 ADDED R0.2 0/-0.2 C13 WAS 87° 0/-2° C14 ADDED R0.3 0/-0.3 C15 ADDED (2X)R0.3 0/-0.3 C16 ADDED (2X)R0.2 0/-0.2 C17 ADDED 2 C18 REMOVED 4 C19 ADDED 2 C20 WAS (4X)R2.8±0.1 C21 WAS 6.4 +0.3/0 0.2 B C22 WAS 7.0±0.1 C23 REMOVED 10.5+0.1/0 C24 WAS (11.95) C25 WAS 10.4 +0.3/0 0.2 C C26 WAS 13.55 C27 WAS 11 C28 ADDED 4.5 C29 ADDED 1 C30 ADDED 8.85±0.05 C31 REMOVED 6.05 +0.05/0 C32 ADDED 0.38 C33 REMOVED 2.8 C34 REVISED NOTES	01-03-14	SR	MGM
082	B	ADDED KEYING OPTIONS E & F AND ADDED NOTE FOR CONSTRUCTION BELOW DATUM A	05-18-10	SR	FAH
-	A	RELEASED	01-08-09	SR	FAH

TOLERANCES (UNLESS OTHERWISE SPECIFIED)
DIMENSIONS ARE IN MILLIMETERS
ANGLES ± 2°
X.X ± 0.25 X.XX ± 0.10

THIRD ANGLE PROJECTION

EWCAP

SCALE	DRAWN BY	CHECKED BY	DATE
5:1	RANGARAJAN	FRANK HOLUB	11-19-2008

TITLE
DIRECT CONNECT INTERFACE
2 WAY (1 X 2) 1.2MM SEALED MALE

SHEET	DRAWING NUMBER	SIZE	DO NOT SCALE DRAWING / COMPUTER AIDED DRAWING	REVISION LEVEL
1 of 1	120-S-002-1-Z02	E		E

DELPHI
BUILT FOR ELECTRICAL ARCHITECTURE
35467830

E SIZE SHEET