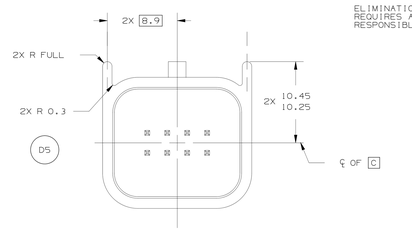

064-S-008-2-A01
(OPTION A)

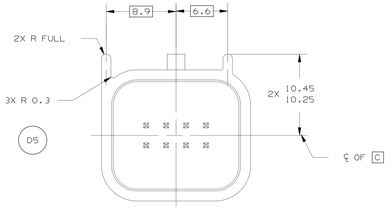

064-S-008-2-B01
(OPTION B)

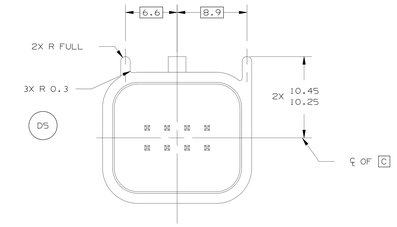

064-S-008-2-C01
(OPTION C)

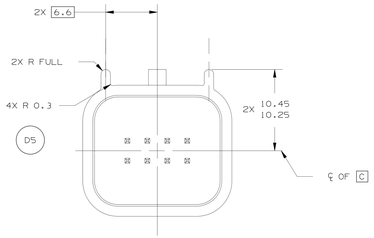

064-S-008-2-D01
(OPTION D)

F1

064-S-008-2-D01	D	GREEN
064-S-008-2-C01	C	BROWN
064-S-008-2-B01	B	GREY
064-S-008-2-A01	A	BLACK
EWCAP P/N	OPTION	MATING CONNECTOR COLOR 4

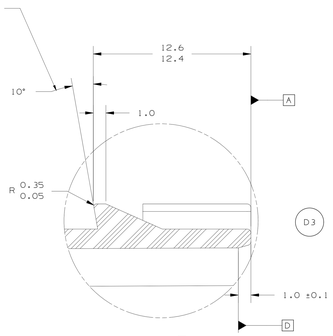

DETAIL E
SCALE 8:1

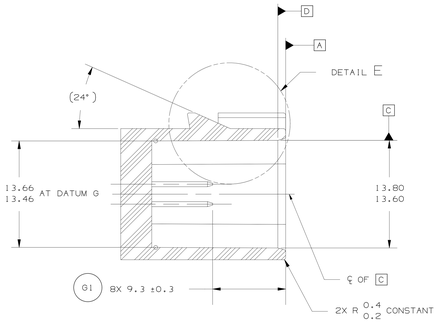

SECTION A-A

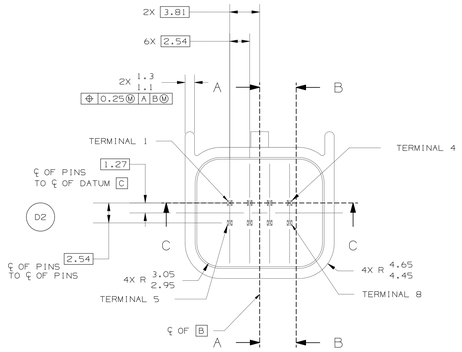

OPTION A SHOWN

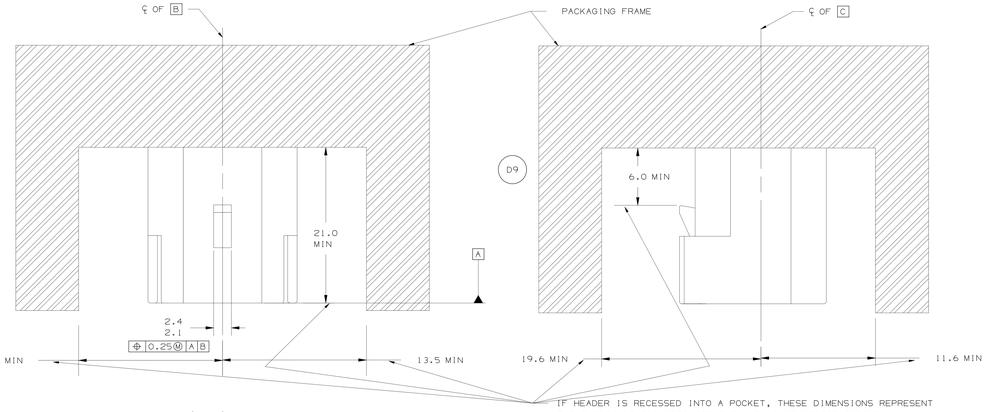

D1

ISOMETRIC VIEW
SCALE 1:1

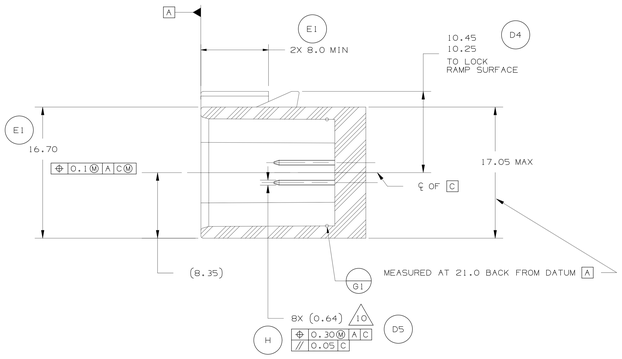

SECTION B-B

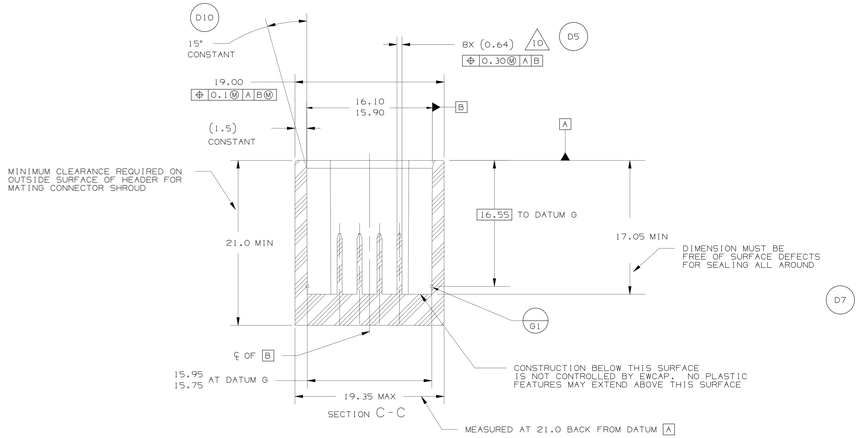

SECTION C-C

D5

NOTES:

1. ALL DIMENSIONS SHOWN IN MILLIMETERS.
2. DIMENSIONING AND TOLERANCING PER ASME Y14.5M-1994.
3. RADII ON ALL CORNERS SHOWN SHARP OR ALL UNSPECIFIED RADII: 0.25 EXCEPT AS NOTED.
4. REFER TO "SAE/USCAR-12 CONNECTOR DESIGN GUIDELINES FOR ADDITIONAL INFORMATION.
5. A FULL SHROUD ON THE MATING CONNECTOR IS REQUIRED TO INSURE THAT THE CONNECTOR-HEADER POLARIZATION FEATURES (OPTIONS A THROUGH D) WILL FUNCTION. THE FULL SHROUD ALSO PREVENTS SCOOP DAMAGE TO THE HEADER PINS. REFER TO "SAE/USCAR-12 CONNECTOR DESIGN GUIDELINES" FOR ADDITIONAL INFORMATION.
6. RECOMMENDED COLORS FOR POLARIZATION - DEVIATION REQUIRES APPROVAL OF AUTHORIZED PERSON.
7. 0.25 DEGREE DRAFT ON INSIDE WALLS STARTING AT DATUM D.
8. SECTION LINES ARE COMMON TO ALL OPTIONS.
9. DIMENSIONS IN ( ) ARE FOR REFERENCE.
10. FOR PIN GEOMETRIC AND PLATING REQUIREMENTS, REFER TO EWCAP DWG. NO. EWCAP-001, DETAIL 064-T001

D7

CHANGE NOTICE NUMBER	LET	REVISION RECORD	DATE	DWN	CHK
133	H	ADDED PARALLELISM CONTROL	06JA17	CGD	BB
110	G1	DIM 8X 9.3 +/-0.3 WAS 8X 9.3 +/-0.1	27OCT15	AHY	JFF
066	F1	064-S-008-2-Z01 WAS (50-S-008-2-Z01	28JN06	JC	JJ
046	E1	DIM 16.70 WAS 16.7, 2X 8.0 MIN WAS 2X 8.6 MIN	09JN04	MB	JD
	D10	15° WAS 17°/13°			
	D9	ADDED PKG DIM 6.0 MIN			
	D8	R 0.3 ADDED			
	D7	ADDED NOTE 10.			
	D6	ANGLES TOLERANCE ±2° WAS 0° 30°			
	D5	ADDED FEATURE CONTROL BOX			
		MOVED PIN DETAILS TO DWG. EWCAP-001			
		EDIT DRAWING TO CONFORM TO THE			
		LATEST USCAR SPECIFICATION			
	D4	ADDED DIM 10.45/10.25 AND			
		NOTE "TO LOCK RAMP SURFACE".			
	D3	REMOVED DIM 13°/17° FROM DETAIL E			
	D2	ADDED NOTE ℄ OF DATUM C TO ℄ OF PINS AND MOVED DIM FROM SEC. A-A			
024	D1	REMOVED NOTICE	08MAY03	JC	JJ
012A	C	SEE CHANGE NOTICE	04FE03	JC	JJ
006	B	PIN NOTES UPDATED.	22MAY02		
		DIMENSIONS UPDATED.			
		NO PHYSICAL CHANGES			
		MADE TO THE DESIGN.			
	A	RELEASED	30AUG01	RR	

D6

TOLERANCES (UNLESS OTHERWISE SPECIFIED)
DIMENSIONS ARE IN MILLIMETERS
ANGLES ± 2°
.X ± .25 .XX ± .13

THIRD ANGLE PROJECTION

USCAR-EWCAP

SCALE	DRAWN BY	CHECKED BY	DATE
1-4	J. CUPIT	J. JONES	

TITLE
DIRECT CONNECT INTERFACE -B WAY (2X4)
0.64MM SEALED MALE

SHEET	DRAWING NUMBER	SIZE	DO NOT SCALE DRAWING COMPUTER GENERATED DRAWING	REVISION LEVEL
1-1	064-S-008-2-Z01	E		H

DELPHI
CONNECTION SYSTEMS
15438864 REV 03AA

064-S-008-2-Z01-H