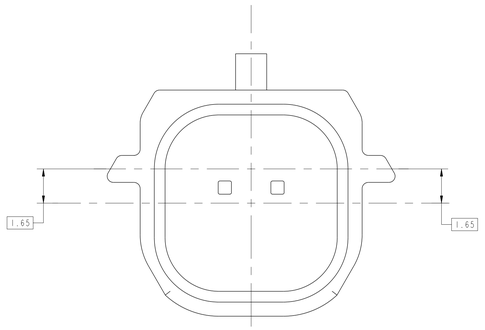

064-S-002-1-A01
(OPTION A)

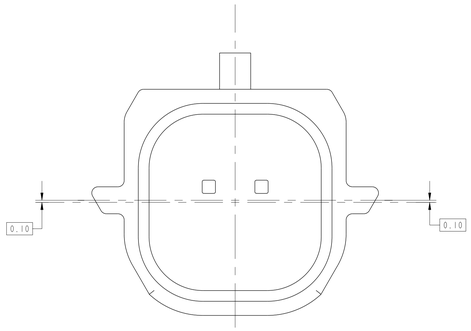

064-S-002-1-B01
(OPTION B)

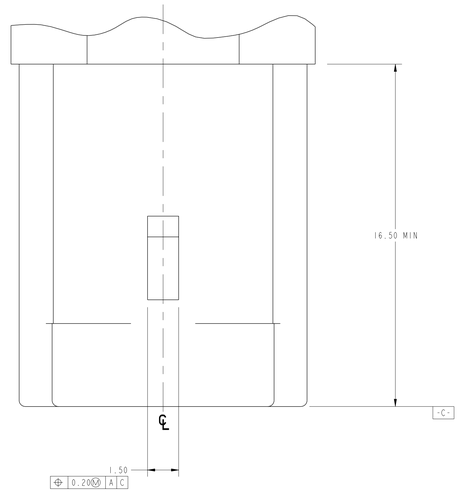

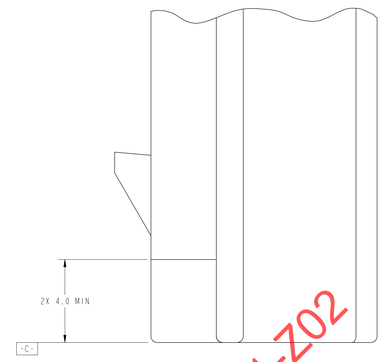

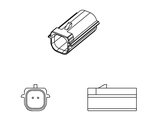

FULL SIZE VIEWS

B7

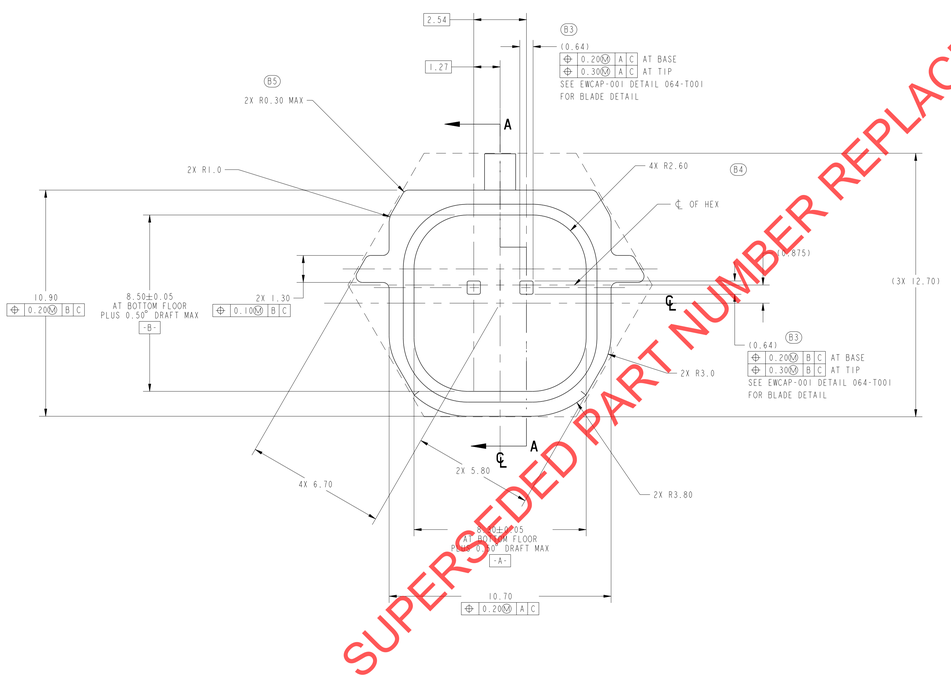

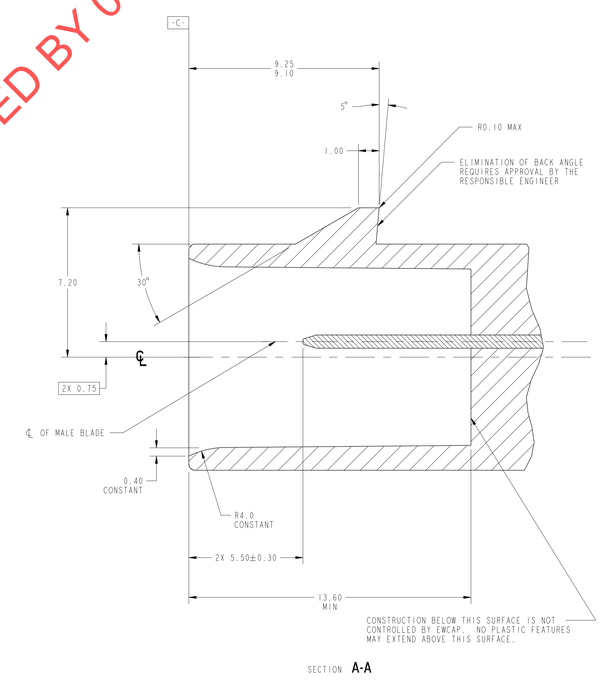

SECTION A-A

SUPERSEDED PART NUMBER REPLACED BY 064-S-002-1-Z02

SUPERSEDED BY 064-S-002-1-Z02

NOTES: UNLESS OTHERWISE SPECIFIED

1. DRAFT ANGLE PERMISSIBLE ONLY WITHIN DRAWING TOLERANCE
2. 0°30′ MAXIMUM DRAFT ANGLE
3. ALL UNSPECIFIED RADII: 0.30
4. 0.3 MAXIMUM RADIUS PERMISSIBLE ON EDGES SHOWN AS SHARP

5. STANDARD COLORS FOR POLARIZATIONS - DEVIATION REQUIRES APPROVAL OF AUTHORIZED PERSON.

064-S-002-1-B01	B	GRAY
064-S-002-1-A01	A	BLACK
EWCAP P/N	OPTION	MATING CONNECTOR COLOR

5

CHANGE SERIAL NUMBER	LET	REVISION RECORD	DATE	DWN	CHK
049	C1	ADDED 064-S-002-1-B01 (OPTION B)	040803	SAF	CLS
041	B7 B6 B5 B4 B3 B2 B1	REMOVED NOTICE NOTE REMOVED EWCAP FROM TITLE BLOCK 0.30 WAS 0.10 ADDED NOTE TO DIMENSION ADDED DIMENSION (2) PLACES REMOVED BLADE DETAIL REMOVED POLARIZATION B, C, D	040327	SAF	CLS
	A	INITIAL RELEASE	010920	SAF	CLS

TOLERANCES (UNLESS OTHERWISE SPECIFIED)
DIMENSIONS ARE IN MILLIMETERS
ANGLES ± 2°
X.X ± 0.25 X.XX ± 0.10

THIRD ANGLE PROJECTION

B6

SCALE	DRAWN BY	CHECKED BY	DATE
10:1	S. FINSTROM	C. SHINABARGAR	010423

TITLE
DIRECT CONNECT INTERFACE - 2 WAY
0.64MM SEALED MALE

SHEET	DRAWING NUMBER	SIZE	DO NOT SCALE DRAWING COMPUTER AIDED DRAWING	REVISION LEVEL
1 of 1	064-S-002-1-Z01	E		C

E SIZE SHEET

064-S-002-1-Z01