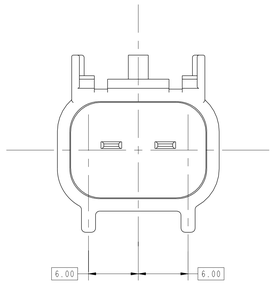

280-S-002-I-A01
(OPTION A)

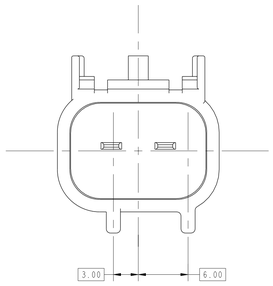

280-S-002-I-B01
(OPTION B)

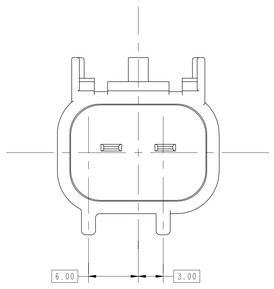

280-S-002-I-C01
(OPTION C)

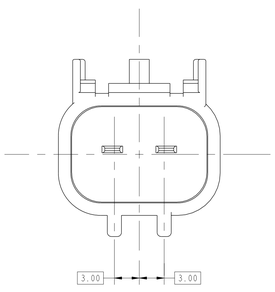

280-S-002-I-D01
(OPTION D)

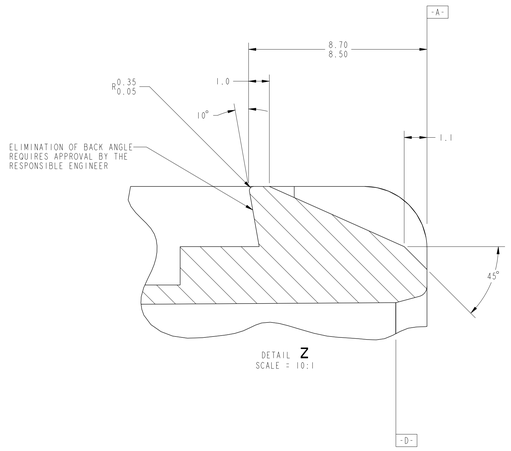

DETAIL Z
SCALE = 10:1

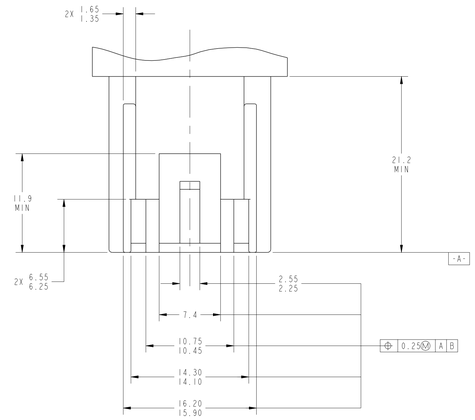

ISOMETRIC VIEW
SCALE = 1:1

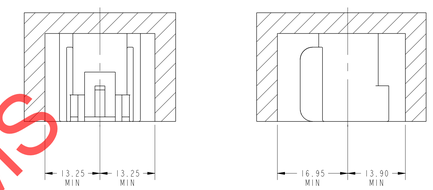

VIEWS SHOWING MATING ASSEMBLY ENVELOPE
FOR REFERENCE ONLY
SCALE = 2:1
B6

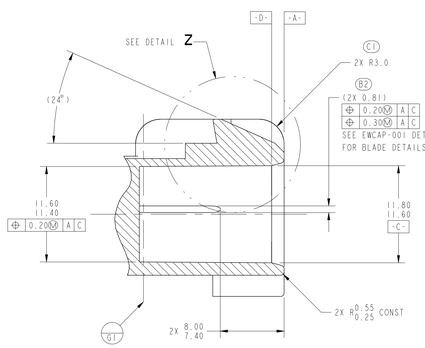

SECTION A-A

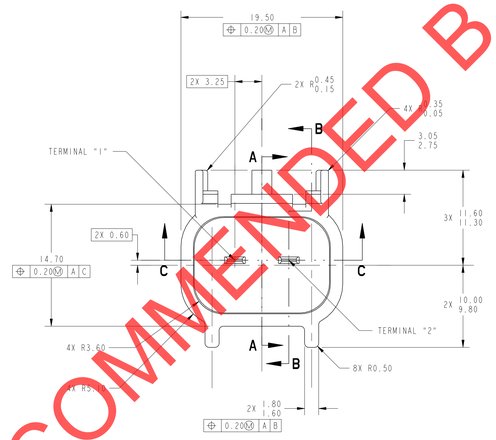

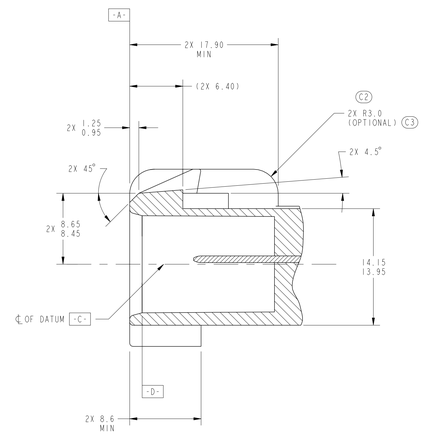

SECTION B-B

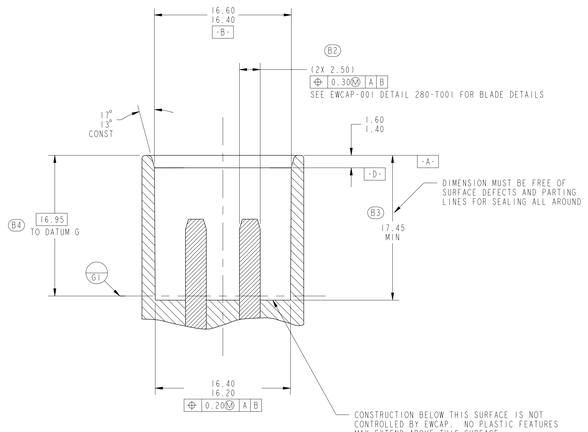

SECTION C-C

B5 NOTES:
1. ALL DIMENSIONS SHOWN IN MILLIMETERS.
2. RADII ON ALL CORNERS SHOWN SHARP OR ALL UNSPECIFIED RADII: 0.25 MAX. EXCEPT AS NOTED.
3. STANDARD COLORS FOR POLARIZATIONS - DEVIATION REQUIRES APPROVAL OF AUTHORIZED PERSON.
C4 4. PREVIOUS REVISIONS ARE ACCEPTABLE

EWCAP P/N	OPTION	MATING CONNECTOR COLOR
280-S-002-I-D01	D	GREEN
280-S-002-I-C01	C	BROWN
280-S-002-I-B01	B	GRAY
280-S-002-I-A01	A	BLACK

3

CHANGE SERIAL NUMBER	LET	REVISION RECORD	DATE	DWN	CHK
061	C4	ADDED NOTE 4			
	C3	REVISED NOTE			
	C2	2X R3.0 WAS 2X R2.0			
	C1	2X R3.0 WAS 2X R1.0	050429	SAF	SAF
011	B6	ADDED VIEWS AND ASSOCIATED DIMS.			
	B5	REMOVED BLADE WIDTH NOTE			
	B4	ADDED DIMENSION			
	B3	17.45 MIN WAS 17.75/17.45			
	B2	ADDED DIMENSION (2) PLACES			
	B1	REMOVED BLADE DETAIL	021122	SAF	SAF
	A	INITIAL RELEASE	000928	SAF	DEO

TOLERANCES (UNLESS OTHERWISE SPECIFIED)
DIMENSIONS ARE IN MILLIMETERS
ANGLES ± 2°
X.X ± 0.25 X.XX ± 0.13

THIRD ANGLE PROJECTION

SCALE	DRAWN BY	CHECKED BY	DATE
4:1	S FINSTROM	D OSTERHOUSE	00-09-08

TITLE
DIRECT CONNECT INTERFACE - 2 WAY
2.8MM SEALED MALE

SHEET	DRAWING NUMBER	SIZE	DO NOT SCALE DRAWING COMPUTER AIDED DRAWING	REVISION LEVEL
1 of 1	280-S-002-I-Z01	E		C

E SIZE SHEET

280-S-002-I-Z01

NOT RECOMMENDED BY OEMS