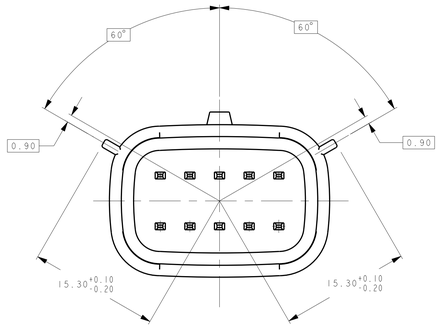

KEYING OPTION A

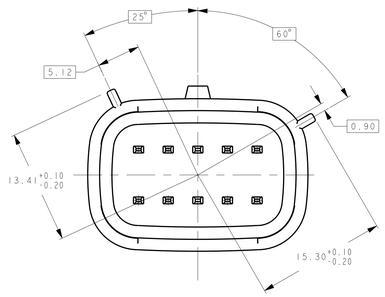

KEYING OPTION B

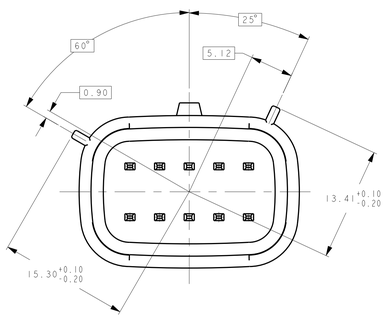

KEYING OPTION C

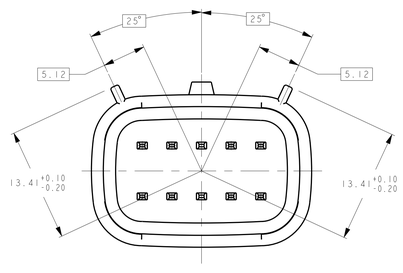

KEYING OPTION D

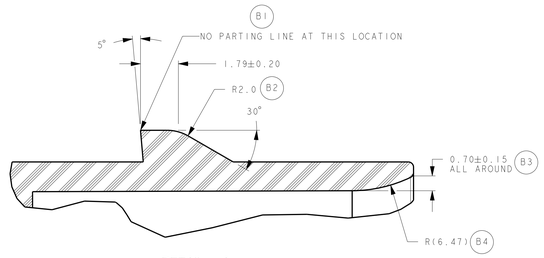

DETAIL A
SCALE 10:1

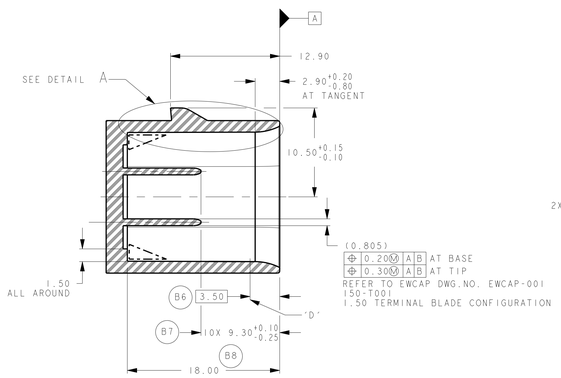

SECTION A-A

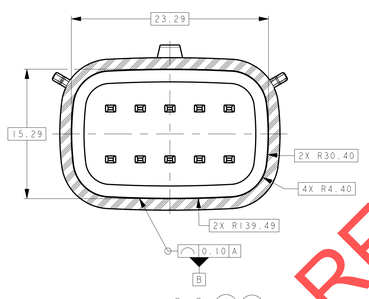

SECTION C-C B12 B13

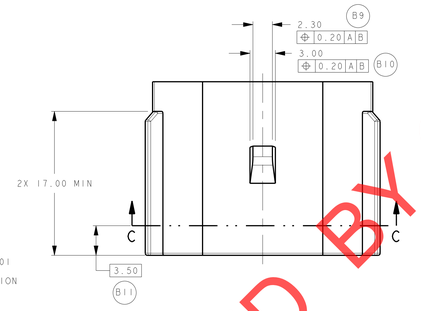

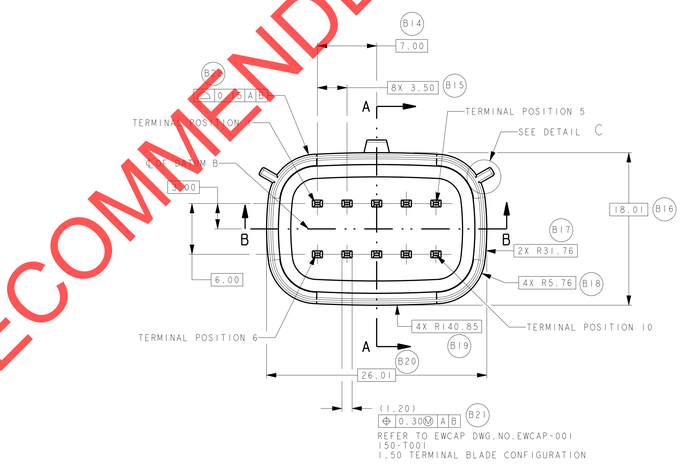

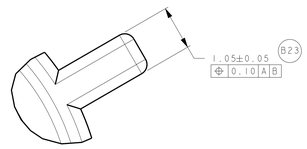

DETAIL C
SCALE 20:1
APPLIES 2X
SEE KEYING OPTION VIEWS
FOR POSTIONS

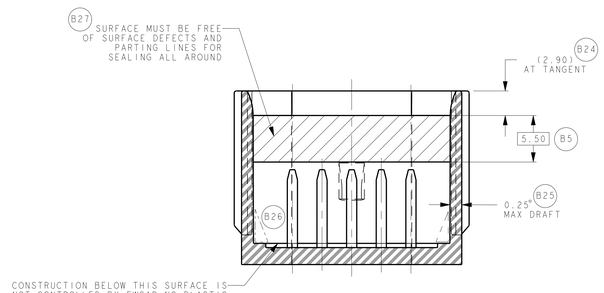

SECTION B-B

IF HEADER IS RECESSED INTO A POCKET,THESE DIMENSIONS REPRESENT THE MINIMUM CLEARANCE REQUIRED FOR THE MATING CONNECTOR SHROUD.

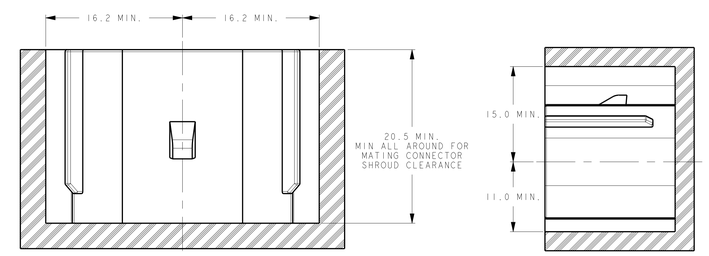

B31 PACKAGING FRAME

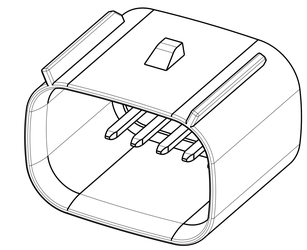

ISO VIEW B29

NOTICE B32

THIS DRAWING OR PORTIONS OF IT ARE CONTROLLED BY THE ELECTRICAL WIRING COMPONENTS APPLICATION PARTNERSHIP (EWCAP), A SUBGROUP OF THE UNITED STATES CONSORTIUM FOR AUTOMOTIVE RESEARCH LLC (USCAR). USCAR IS A PARTNERSHIP BETWEEN CHRYSLER GROUP LLC, FORD MOTOR COMPANY AND GENERAL MOTORS CORPORATION. ANY CHANGE TO A EWCAP CONTROLLED PORTION OF THIS DRAWING, INCLUDING A "RECORD CHANGE" MUST BE APPROVED IN WRITING BY THE RESPONSIBLE EWCAP MEMBER FROM EACH USCAR COMPANY. EACH EWCAP MEMBER AUTHORIZED TO SIGN FOR HIS OR HER COMPANY IS RESPONSIBLE FOR OBTAINING ALL NECESSARY APPROVALS WITHIN THAT COMPANY PRIOR TO SIGNING FOR APPROVAL OF THE CHANGE. EWCAP EXPRESSLY PROHIBITS ANY PARTY FROM CHANGING EITHER ANY EWCAP CONTROLLED PORTION OF THIS DRAWING OR ANY ASSOCIATED TOOLING BEFORE RECEIVING AN APPROVAL SIGNED BY AN AUTHORIZED REPRESENTATIVE FROM EACH EWCAP PARTNER. REFERENCE TO THE SIGNED APPROVAL FORM MUST BE ENTERED IN THIS DRAWING'S CONTROL COLUMN.

B30

NOTES: UNLESS OTHERWISE SPECIFIED

1. ALL DIMENSIONS SHOWN IN MILLIMETERS.
2. DIMENSIONING AND TOLERANCING PER ASME Y14.5M-1994
3. 0.25 RADII ON ALL CORNERS SHOWN SHARP.
4. UNSPECIFIED RADII: 0.25 EXCEPT AS NOTED
5. STANDARD COLORS FOR POLARIZATION (SEE CHART). DEVIATION REQUIRES APPROVAL OF AUTHORIZED PERSON.
6. REFER TO 'SAE/USCAR 12 CONNECTOR GUIDELINES' FOR ADDITIONAL REQUIREMENTS.
7. EXCEPT WHERE NOTED, DRAFT ON OUTSIDE SURFACES IS PERMISSIBLE WITHIN TOLERANCE.
8. ◁ SYMBOL INDICATES DRAFT DIRECTION.
9. FOR TERMINAL MATERIAL, DIMENSIONAL, COATING REQUIREMENTS AND ANY BLADE TERMINAL DESIGN INFORMATION NOT SHOWN ON THIS DRAWING SEE EWCAP DRW. NO. EWCAP-001
10. A FULL SHROUD ON THE MATING CONNECTOR IS REQUIRED TO INSURE THAT THE CONNECTOR-HEADER POLARIZATION FEATURES (OPTIONS A THRU D) WILL FUNCTION. THE FULL SHROUD ALSO PREVENTS SCOOP DAMAGE TO THE HEADER PINS. REFER TO 'SAE/USCAR-12 CONNECTOR DESIGN GUIDE LINES' FOR ADDITIONAL INFORMATION.
11. REFER TO USCAR/EWCAP PART LIST AS FOUND ON WEBSITE http:// www.uscarteams.org
12. THIS IS A 100% CAD GENERATED PART. THE CAD MATHEMATICAL DATA IS THE MASTER FOR THIS PART. FOR DIMENSIONAL OR ANY INFORMATION NOT SHOWN ON THIS DRAWING, ANALYZE THE CAD MODEL.

B28

EWCAP P/N	OPTION	MATING CONNECTOR COLOR
150-S-010-2-D01	D	BLACK
150-S-010-2-C01	C	BROWN
150-S-010-2-B01	B	GREY
150-S-010-2-A01	A	BLACK

CHANGE SERIAL NUMBER	LET	REVISION RECORD	DATE	DWN	CHK
095	B32	NOTICE ADDED	06-07-12	SMR	SSS
095	B31	PACKAGING FRAME ADDED			
095	B30	UPDATED NOTES			
095	B29	CHANGED ISO VIEW SCALE TO 4:1 WAS 1:1			
095	B28	COLOR BLACK WAS GREEN			
095	B27	MOVED NOTE TO SECTION B-B			
095	B26	SHOWN DRAFT ANGLE DIRECTION			
095	B25	ADDED 0.25° MAX DRAFT ANGLE			
095	B24	ADDED (2.90)			
095	B23	0.10 A B WAS 0.10 Ⓜ A B			
095	B22	ADDED ⌓ 0.15 A B			
095	B21	ADDED NOTE TO TERMINAL BLADE			
095	B20	CHANGED TO BASIC FROM REFERENCE DIMENSION			
095	B19	ADDED 4X R140.85			
095	B18	ADDED 4X R5.76			
095	B17	ADDED 2X R31.76			
095	B16	CHANGED TO BASIC FROM REFERENCE DIMENSION			
095	B15	UPDATED DIM 8X3.50 WAS 4X3.50			
095	B14	REMOVED 2X FROM DIM 7.00			
095	B13	DATUM 'D' DIMENSIONS MOVED TO SECTION C-C			
095	B12	ADDED SECTION C-C			
095	B11	ADDED 3.50			
095	B10	ADDED 0.20 A B			
095	B9	ADDED 0.20 A B			
095	B8	CHANGED TO NOMINAL FROM BASIC DIM.			
095	B7	UPDATED TO 10X FROM 5X			
095	B6	SURFACE 'D' RELOCATED TO 3.50 WAS AT 8.20			
095	B5	ADDED 5.50 IN SECTION B-B			
095	B4	ADDED R(6.47)			
095	B3	ADDED 0.70±0.15 ALL AROUND			
095	B2	R2.0 WAS R2.00			
095	B1	ADDED PARTING LINE NOTE TO DETAIL A			
-	A	RELEASED	01/23/04	MUTHU	FAH

TOLERANCES (UNLESS OTHERWISE SPECIFIED)
DIMENSIONS ARE IN MILLIMETERS
ANGLES ± 2°
X.X ± 0.25 X.XX ± 0.10

THIRD ANGLE PROJECTION

EWCAP

SCALE	DRAWN BY	CHECKED BY	DATE
4:1	RANGARAJAN	FRANK HOLUB	01-22-04

TITLE
DIRECT CONNECT INTERFACE
10 WAY (2 X 5) 1.50MM SEALED MALE

SHEET	DRAWING NUMBER	SIZE	DO NOT SCALE DRAWING COMPUTER AIDED DRAWING	REVISION LEVEL
1 of 1	150-S-010-2-Z01	E		B

E SIZE SHEET

NOT RECOMMENDED BY OEMS