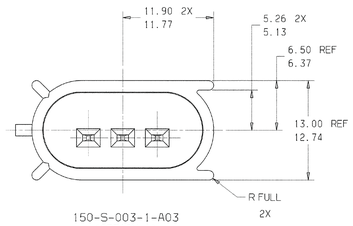

150-S-003-1-A03
(OPTION A)

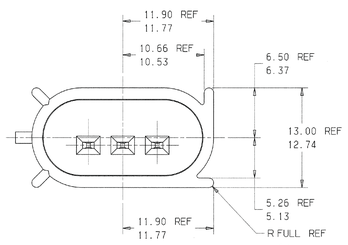

150-S-003-1-B03
(OPTION B-SHOWN)

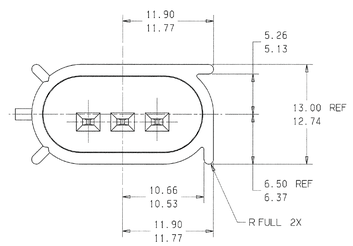

150-S-003-1-C03
(OPTION C)

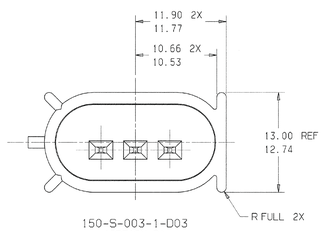

150-S-003-1-D03
(OPTION D)

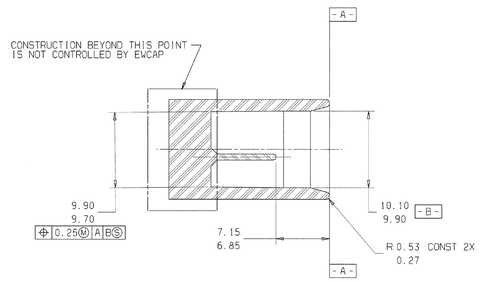

SECTION B/B

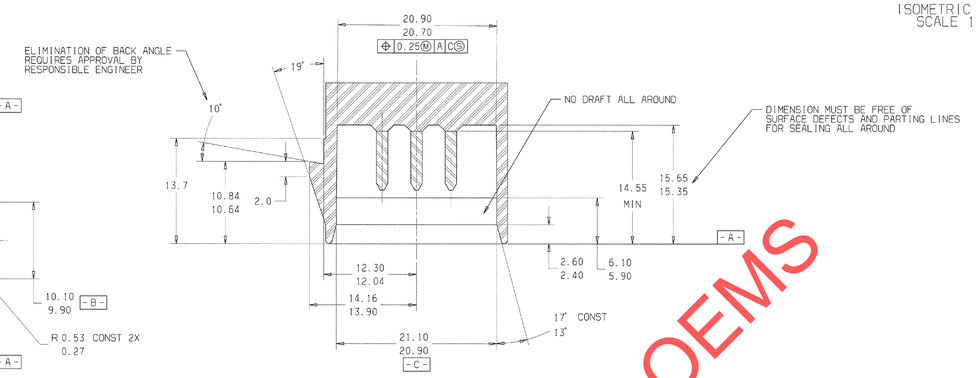

SECTION A/A

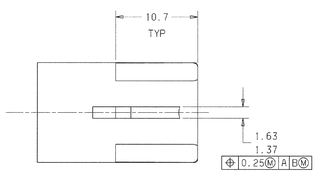

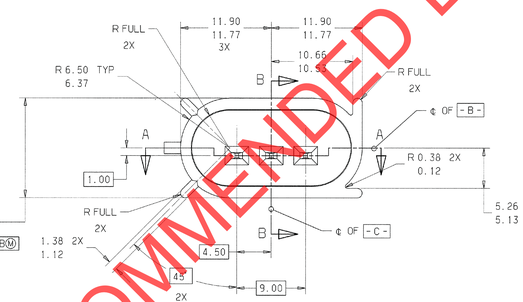

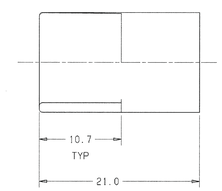

(MINIMUM DISTANCE REQUIRED FOR
FEMALE SHROUD ENGAGEMENT)

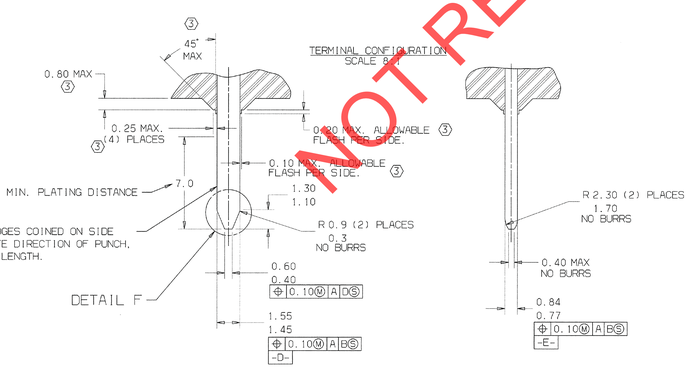

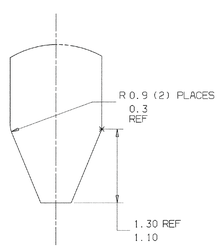

DETAIL F
SCALE 32:1

ISOMETRIC VIEW
SCALE 1:1

NOTICE

THIS DRAWING, OR PORTIONS OF IT, ARE CONTROLLED BY THE ELECTRICAL WIRING COMPONENTS APPLICATION PARTNERSHIP (EWCAP), A SUBGROUP OF THE UNITED STATES CONSORTIUM FOR AUTOMOTIVE RESEARCH (USCAR). USCAR IS A PARTNERSHIP BETWEEN DAIMLERCHRYSLER CORPORATION, FORD MOTOR COMPANY, AND GENERAL MOTORS CORPORATION. ANY CHANGE TO A EWCAP CONTROLLED PORTION OF THIS DRAWING, INCLUDING A "RECORD CHANGE," MUST BE APPROVED, IN WRITING, BY THE RESPONSIBLE EWCAP MEMBER FROM EACH USCAR COMPANY. EACH EWCAP MEMBER AUTHORIZED TO SIGN FOR HIS OR HER COMPANY IS RESPONSIBLE FOR OBTAINING ALL NECESSARY APPROVALS WITHIN THAT COMPANY PRIOR TO SIGNING FOR APPROVAL OF THE CHANGE. EWCAP EXPRESSLY PROHIBITS ANY PARTY FROM CHANGING EITHER ANY EWCAP CONTROLLED PORTION OF THIS DRAWING OR ANY ASSOCIATED TOOLING BEFORE RECEIVING AN APPROVAL SIGNED BY AN AUTHORIZED REPRESENTATIVE FROM EACH EWCAP PARTNER. REFERENCE TO THE SIGNED APPROVAL FORM MUST BE ENTERED IN THIS DRAWING'S CONTROL COLUMN.

MALE TERMINAL PHYSICAL AND ELECTRICAL REQUIREMENTS-(EXCEPTIONS MUST BE APPROVED BY THE RESPONSIBLE ENGINEER):

BASE MATERIAL - COPPER ALLOY

ELECTRICAL CONDUCTIVITY - ≥28% IACS AT 20°C (AS ANNEALED).
USE OF MATERIALS WITH CONDUCTIVITY <28% IACS OR NON-COPPER ALLOYS ARE ACCEPTABLE WHEN APPROVED BY THE RESPONSIBLE ENGINEER.

CONTACT AREA PLATING -
TIN - FOR UP TO 125°C MAX. CONTINUOUS TEMPERATURE
BARRIER PLATE - (OPTIONAL FOR SOLDERABILITY) UNDERPLATE WITH COPPER 0.0025MM (100µ-INCHES) MINUMUM THICKNESS.
TOP LAYER - 0.0050±0.0025MM (200±100µ-INCHES) TIN

PRECIOUS METAL - (WHEN SPECIFIED)
BARRIER PLATE - (OPTIONAL FOR SOLDERABILITY) UNDERPLATE WITH COPPER 0.0025MM (100µ-INCHES) MINIMUM THICKNESS.
INTERMEDIATE LAYER #1 - NICKEL - 0.0012MM (50µ-INCHES) MIN. NICKEL ELECTROPLATE
INTERMEDIATE LAYER #2 - (OPTIONAL) 0.001MM (40 µ-INCHES) MIN. PALLADIUM ELECTROPLATE
TOP PLATING - 0.0001MM (4µ-INCHES) MIN. HARD-GOLD ELECTROPLATE IF INTERMEDIATE LAYER #2 IS APPLIED. 0.0005MM (20 µ-INCHES) MIN. HARD GOLD ELECTROPLATE IF INTERMEDIATE LAYER #2 IS NOT APPLIED.

PROCESS LUBRICANT:
ANY PROCESS LUBRICANT REMAINING ON TERMINAL MUST NOT VARNISH OR DEGRADE ITS ELECTRICAL PERFORMANCE UP TO A MAXIMUM CLASS AMBIENT TEMPERATURE PER SAE/USCAR-2 FOR 1008 HOURS.
PROCESS LUBRICANTS SHOULD BE APPROVED BY THE RESPONSIBLE ENGINEER.

NOTES:
1. ALL DIMENSIONS SHOWN IN MILLIMETERS.
2. RADII ON ALL CORNERS SHOWN SHARP OR ALL UNSPECIFIED RADII: 0.25 MAX. EXCEPT AS NOTED.
3. THESE DIMENSIONS GOVERN FEATURES OF OPTIONAL CONSTRUCTION.

EWCAP P/N	OPTION
150-S-003-1-D03	D
150-S-003-1-C03	C
150-S-003-1-B03	B
150-S-003-1-A03	A

CHANGE SERIAL NUMBER	LET	REVISION RECORD	DATE	DWN	CHK
	A	INITIAL RELEASE	05-10-99	MLA	JJ

TOLERANCES (UNLESS OTHERWISE SPECIFIED)
DIMENSIONS ARE IN MILLIMETERS
ANGLES ± 0° 30'
.X ± .25 .XX ± .13
THIRD ANGLE PROJECTION

EWCAP

SCALE 4:1 | DRAWN BY M. ANDERSON | CHECKED BY H. ZAVERZENCE | DATE 09-11-98

TITLE
DIRECT CONNECT INTERFACE - 3 WAY (1X3)
1.5MM SEALED MALE (w/SIDE LATCH)

SHEET 1 OF 1 | DRAWING NUMBER 150-S-003-1-Z03 | SIZE E | DO NOT SCALE DRAWING COMPUTER AIDED DRAWING | REVISION LEVEL A

E SIZE SHEET

150-S-003-1-Z03

NOT RECOMMENDED BY OEMS