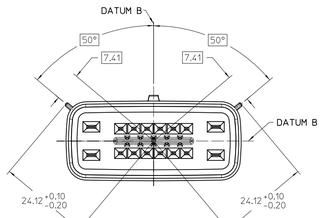

KEYING OPTION A
SCALE 2:1
B14

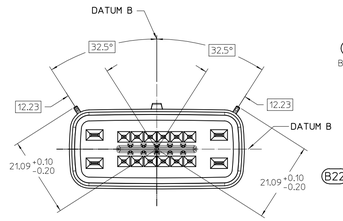

KEYING OPTION E
SCALE 2:1
B14

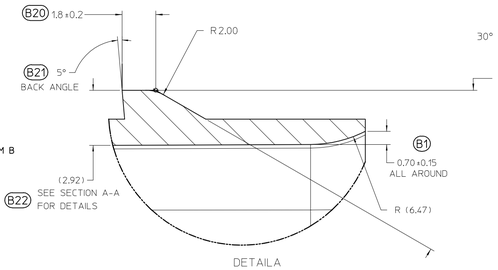

DETAILA
SCALE 10:1

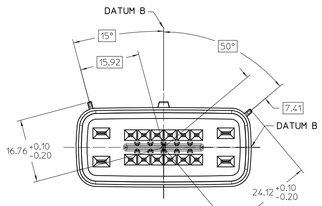

KEYING OPTION B
SCALE 2:1
B14

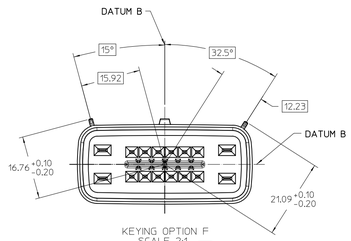

KEYING OPTION F
SCALE 2:1
B14

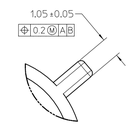

DETAIL C
SCALE 10:1
APPLIES 2X
SEE KEYING OPTION VIEWS
FOR POSITIONS

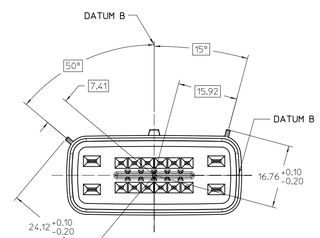

KEYING OPTION C
SCALE 2:1
B14

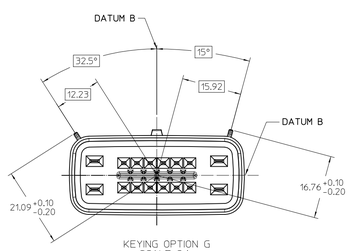

KEYING OPTION G
SCALE 2:1
B14

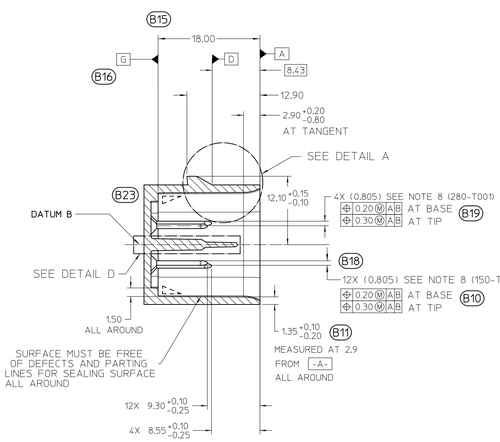

SECTION A-A

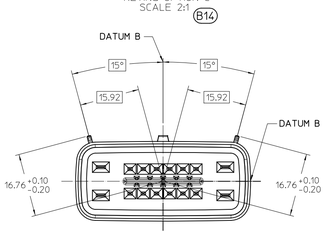

KEYING OPTION D
SCALE 2:1
B14

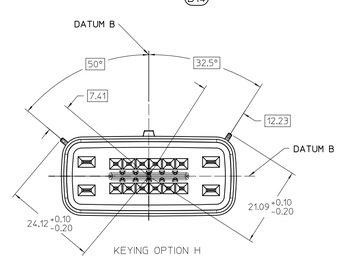

KEYING OPTION H
SCALE 2:1
B14

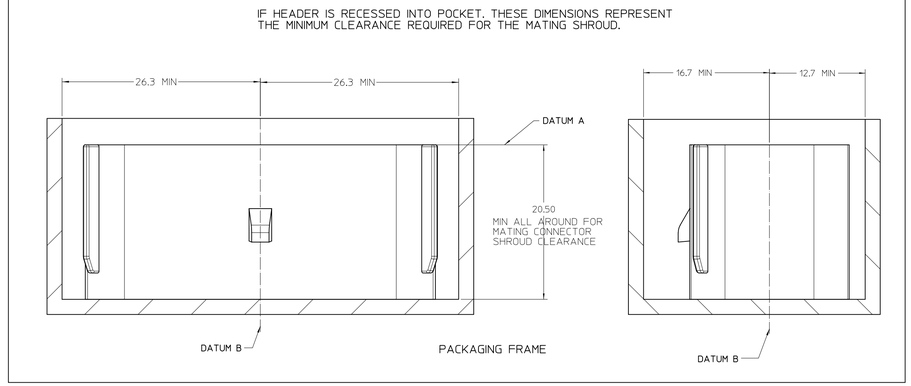

PACKAGING FRAME

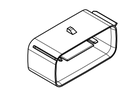

SCALE 1:1

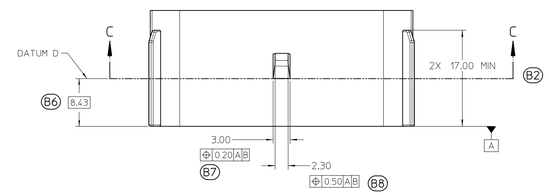

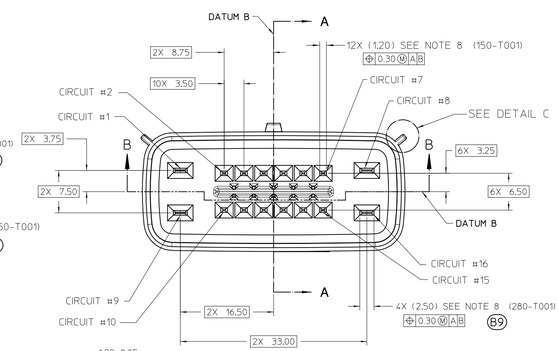

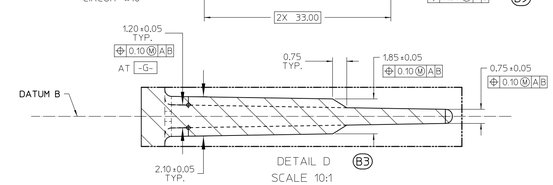

DETAIL D
SCALE 10:1
B3

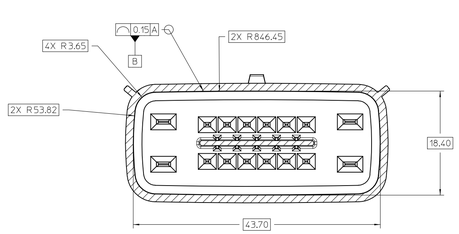

SECTION C-C
AT DATUM -D-
SCALE 3:1
B5

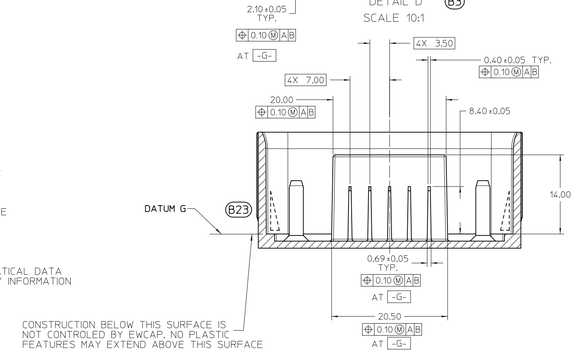

SECTION B-B
SCALE 3:1
B4

NOTES: UNLESS OTHERWISE SPECIFIED

1. DRAFT ANGLE PERMISSIBLE 0.25°MAXIMUM.
2. ALL DIMENSIONS SHOWN IN MILLIMETERS.
3. DIMENSIONING AND TOLERANCING PER ASME Y14.5M-1994
4. RADII ON ALL CORNERS SHOWN SHARP OR ALL UNSPECIFED RADII: 0.25 EXCEPT AS NOTED.
5. STANDARD COLORS FOR POLARIZATION (SEE CHART). DEVATION REQUIRES APPROVAL OF AUTHORIZED PERSON.
6. A FULL SHROUD ON THE MATING CONNECTOR IS REQUIRED TO INSURE THAT THE CONNECTOR-HEADER POLARIZATION FEATURES (OPTIONS A THRU H) WILL FUNCTION. THE SHROUD ALSO PREVENTS SCOOP DAMAGE TO THE HEADER PINS. REFER TO "SAE/USCAR-12 CONNECTOR DESIGN GUIDE LINES" FOR ADDITIONAL INFORMATION.
7. REFER TO USCAR/EWCAP PART LIST AS FOUND ON WEBSITE http://www.uscarteams.org

B13 8. FOR BLADE TERMINAL DESIGN INFORMATION SEE EWCAP DWG. # EWCAP-001

B12 9. THIS IS A 100% CAD GENERATED PART. THE CAD MATHEMATICAL DATA IS THE MASTER FOR THIS PART. FOR DIMENSIONAL OR ANY INFORMATION NOT SHOWN ON THIS DRAWING, ANALYZE THE CAD MODEL.

EWCAP PN	OPTION	MATING CONNECTOR COLOR
999-S-016-2-H01	H	YELLOW
999-S-016-2-G01	G	YELLOW
999-S-016-2-F01	F	YELLOW
999-S-016-2-E01	E	YELLOW
999-S-016-2-D01	D	BLACK
999-S-016-2-C01	C	DARK GRAY
999-S-016-2-B01	B	GREY
999-S-016-2-A01	A	BLACK

B17

CHANGE SERIAL NUMBER		REVISION RECORD	DATE	DWN	CHK
088	B23	ADDED DRAFT DIRECTION SYMBOL	3-25-11		
088	B22	ADDED REF DIMENSION FOR LATCH HEIGHT	3-11-11		
088	B21	REMOVED THE WORD "OPTION" AT VIEW OF BACK ANGLE	3-11-11		
088	B20	CHANGED FROM 1.79 TO 1.80	3-11-11		
088	B19	ADDED 4X (0.805) 0.20 Ⓜ A B AT BASE AND 0.30 Ⓜ A B AT TIP FOR 2.8 BLADE TERMINALS	1-14-11		
088	B18	CHANGED 16X TO 12X FOR THE 1.5 BLADE TERMINALS	1-14-11		
088	B17	UPDATED CONNECTOR COLORS	1-14-11		
088	B16	ADDED -G-	5-04-10		
088	B15	REMOVED // 0.10 Ⓜ A B	5-04-10		
088	B14	REMOVED SHORTING BAR NOTE	5-04-10		
088	B13	UPDATED NOTE 8 REMOVED REV F	5-04-10		
088	B12	ADDED NOTE 9	5-04-10		
088	B11	ADDED DIM 1.35+0.10/-0.20 MEASURED AT 2.9 FROM -A- ALL AROUND	5-11-10		
088	B10	ADDED SEE NOTE 8	5-04-10		
088	B9	2.50 WAS 2.80, ADDED (280-T001)	5-11-10		
088	B8	ADDED 0.50 A B	5-04-10		
088	B7	ADDED 0.20 A B	5-04-10		
088	B6	ADDED DIM 8.43	5-04-10		
088	B5	ADDED SEC C-C	5-04-10		
088	B4	UPDATED SEC B-B	5-04-10		
088	B3	ADDED DETAIL D	5-04-10		
088	B2	ADDED SEC C-C	5-04-10		
088	B1	ADDED DIM 0.70±0.15 ALL AROUND	5-04-10		
088	B	RELEASED	5-04-10	KC	MV

TOLERANCES (UNLESS OTHERWISE SPECIFIED)
DIMENSIONS ARE IN MILLIMETERS
ANGLES ±3°
.X ±0.2 .XX ±0.10

THIRD ANGLE PROJECTION

EWCAP

SCALE	DRAWN BY	CHECKED BY	DATE
3:1	K. CUNNINGHAM	V. KOSHY	1-14-11

TITLE
DIRECT CONNECT INTERFACE
16 WAY (2 X 8) 1.5 MM SEALED MALE

SHEET	DRAWING NUMBER	SIZE		REVISION LEVEL
1 OF 1	999-S-016-2-Z02	E	DO NOT SCALE DRAWING COMPUTER AIDED DRAWING	B