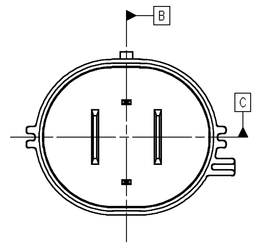

999-S-004-3-A01
(OPTION A)

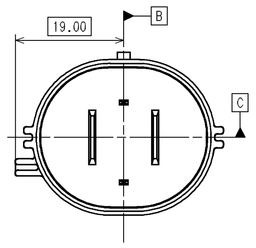

999-S-004-3-B01
(OPTION B)

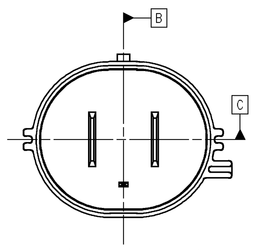

3P (2x9.5mm + 1P 1.5mm)
(OPTION A)
SEE NOTE 12

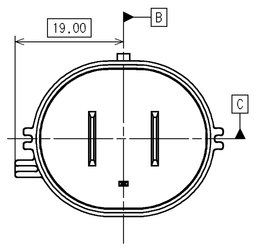

3P (2x9.5mm + 1P 1.5mm)
(OPTION B)
SEE NOTE 12

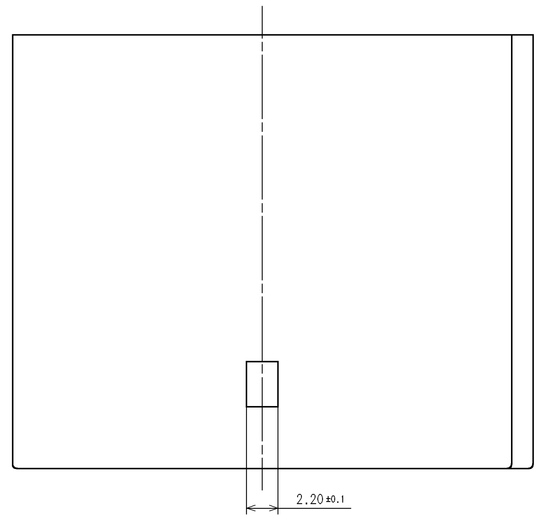

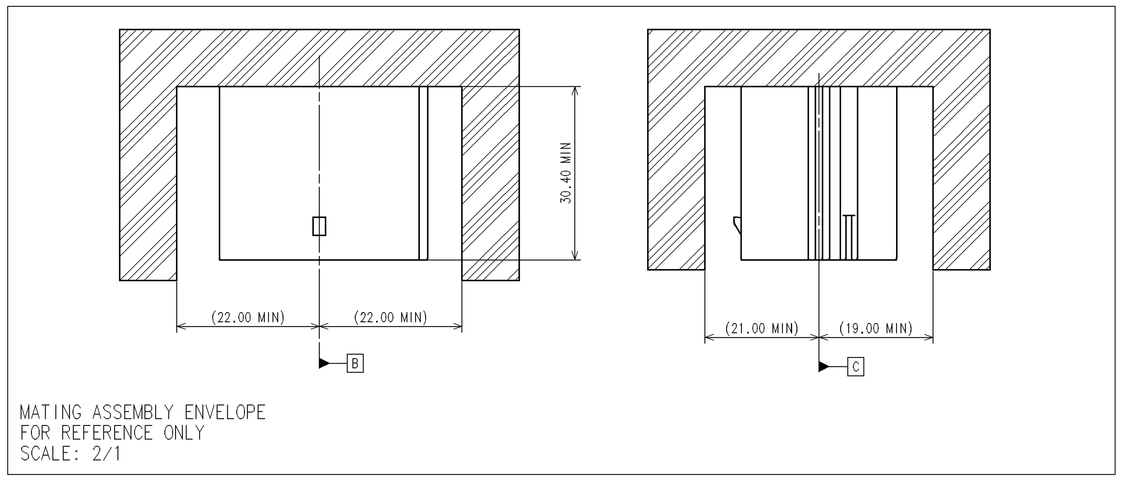

MATING ASSEMBLY ENVELOPE
FOR REFERENCE ONLY
SCALE: 2/1

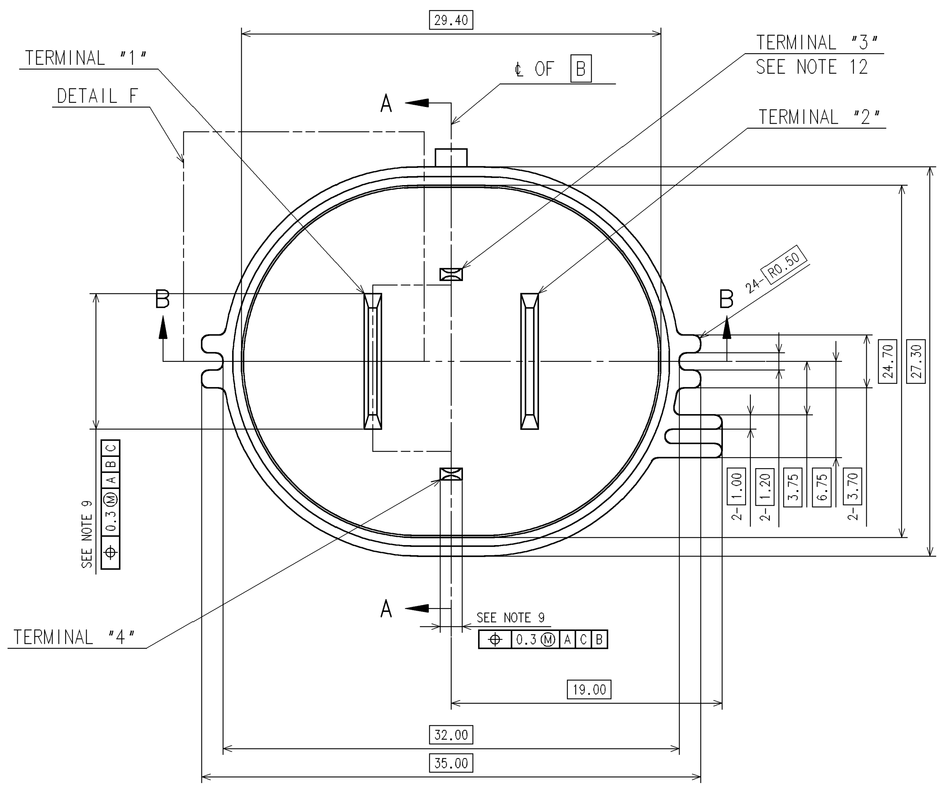

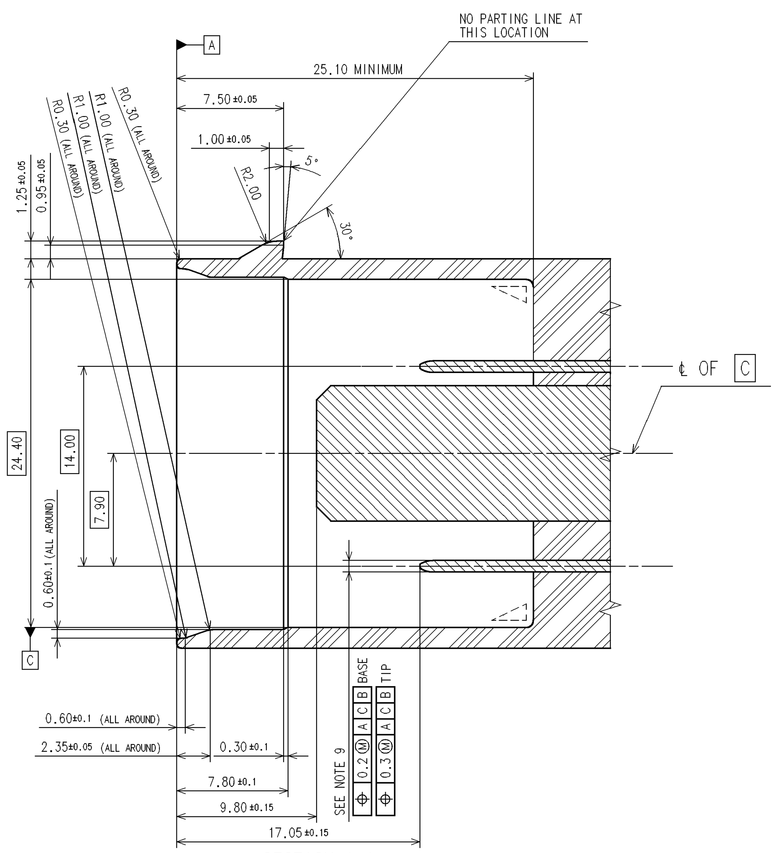

SECTION A-A

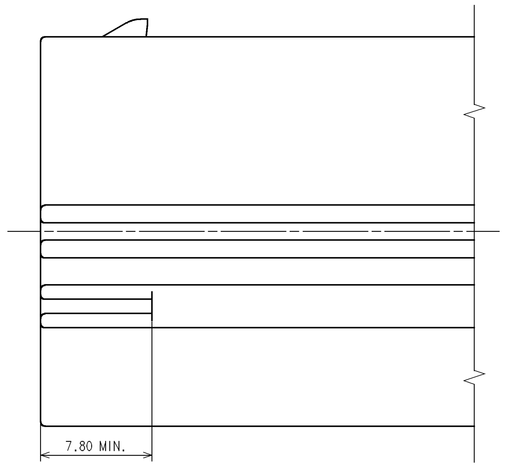

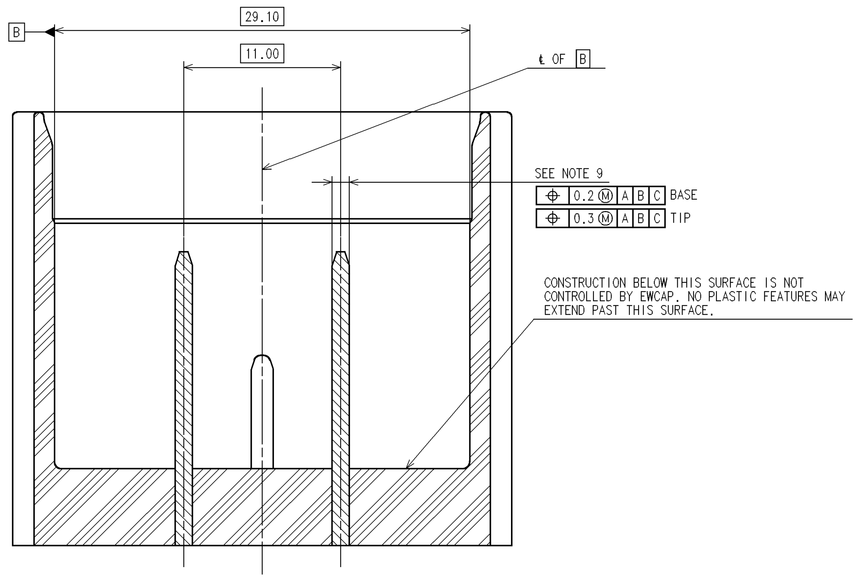

SECTION B-B

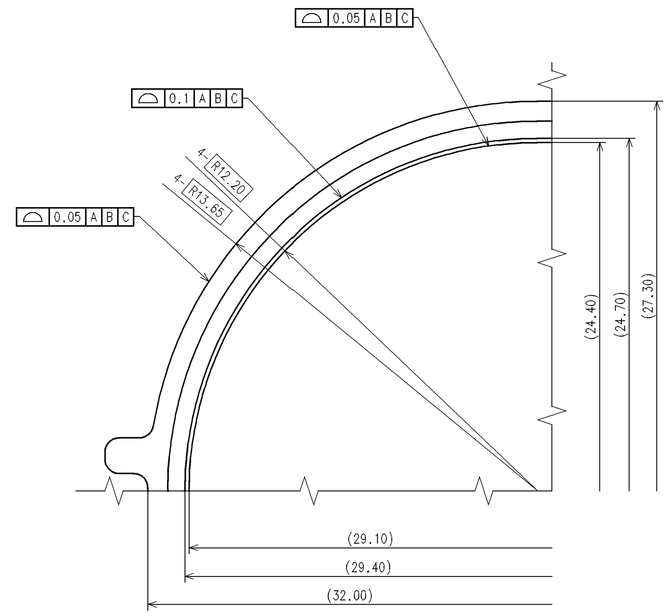

DETAIL F
SCALE 10:1

NOTES:
1. ALL DIMENSIONS ARE IN MILLIMETERS.
2. DIMENSIONING AND TOLERANCING PER ASME Y14.5M.
3. 0.25 MAXIMUM RADIUS PERMISSIBLE ON EDGES SHOWN AS SHARP.
4. ALL UNSPECIFIED RADII 0.25 EXCEPT AS NOTED.
5. STANDARD COLORS FOR POLARIZATIONS
6. REFER TO SAE/USCAR-12 "CONNECTOR DESIGN GUIDELINES" FOR ADDITIONAL REQUIREMENTS.
7. EXCEPT WHERE NOTED, DRAFT ON OUTSIDE SURFACE IS PERMISSIBLE WITHIN TOLERANCE.
8. ⌒ SYMBOL INDICATES DRAFT DIRECTION.
9. FOR TERMINAL MATERIAL, DIMENSIONAL, AND COATING REQUIREMENTS, SEE EWCAP-001 BLADE DRAWING.
10. TO CLAIM USCAR COMPLIANCE, PARTS DESIGNED AND PRODUCED TO THIS FOOTPRINT DRAWING MUST BE TESTED TO AND MEET THE REQUIREMENTS OF SAE/USCAR-2.
11. REVERSE DRAFT PERMISSIBLE IN LATCH AREAS.
12. FOR 3 PIN CONFIGURATION, TERMINAL PIN #3 IS NOT USED.
13. CAVITY NUMBERING PER EXISTING SHELF ITEM PART.

YAZAKI
7287-1404-10
7283-8496-30

999-S-004-3-B01	B	LIGHT GREY
999-S-004-3-A01	A	BLACK
EWCAP P/N	OPTION	MATING CONNECTOR COLOR

CHANGE SERIAL NUMBER	LET	REVISION RECORD	DATE	DWN	CHK
-	A	RELEASED	08.26.09	J.D.	L.K.

TOLERANCES (UNLESS OTHERWISE SPECIFIED)
DIMENSIONS ARE IN MILLIMETERS
ANGLES ± 0° 30'
.X ± .25 .XX ± .13
THIRD ANGLE PROJECTION

EWCAP

SCALE	DRAWN BY	CHECKED BY	DATE
5:1	J.DAWSON	L. KIM	08.26.09

TITLE
4 WAY (2x9.5mm + 2x1.5mm) HYBRID SEALED CONNECTOR INTERFACE

SHEET	DRAWING NUMBER	SIZE		REVISION LEVEL
1 of 1	999-S-004-3-Z01	E	DO NOT SCALE DRAWING COMPUTER AIDED DRAWING	A

E SIZE SHEET

999-S-004-3-Z01