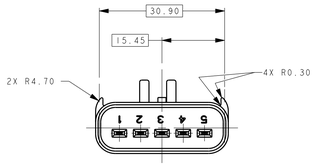

TYPE A

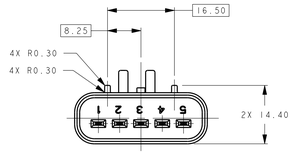

TYPE B

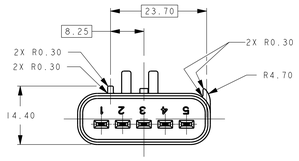

TYPE C

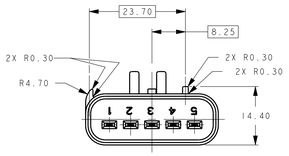

TYPE F

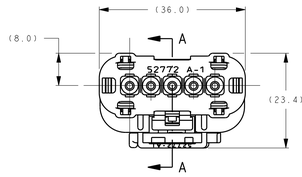

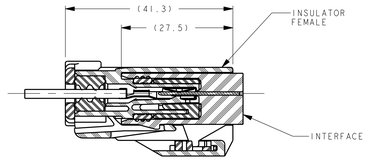

SECTION A-A

CONNECTOR ASSEMBLY VIEWS
FOR REFERENCE ONLY

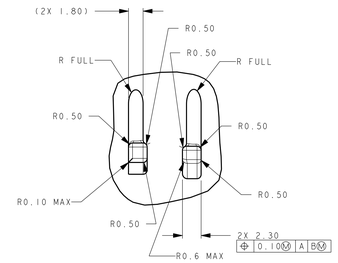

DETAIL Y
SCALE 4X

ISOMETRIC VIEW
SCALE 1:1

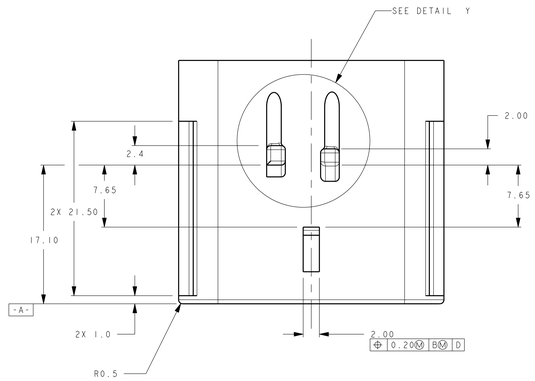

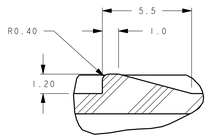

DETAIL Z
SCALE 8X

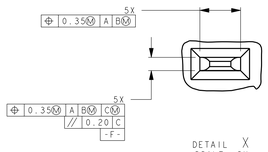

DETAIL X
SCALE 8X
FOR BLADE DIMENSIONS
SEE EWCAP-001,DETAIL 280-T001

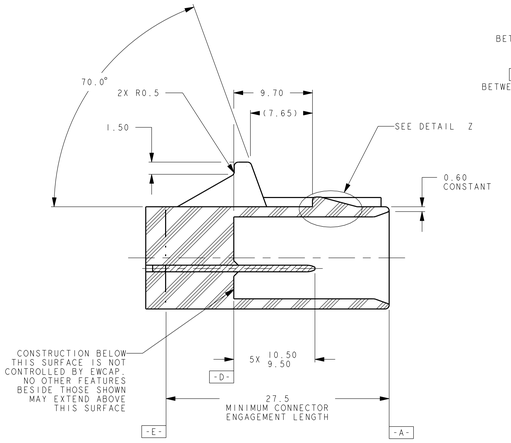

SECTION A-A

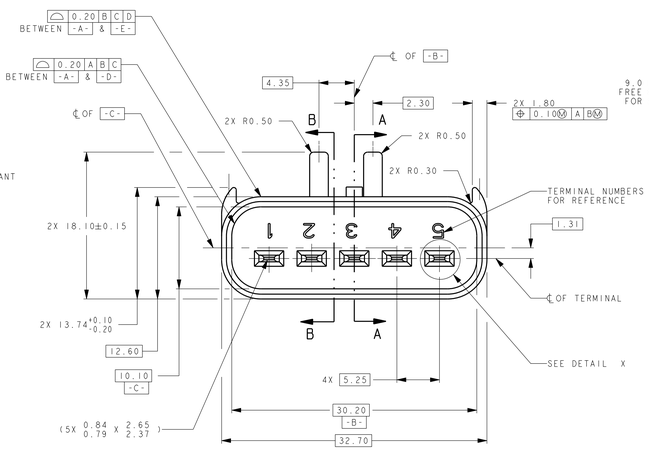

POLARIZING OPTION
TYPE "A" SHOWN
DIMENSIONS FOR OTHER OPTIONS
SAME EXCEPT AS SHOWN

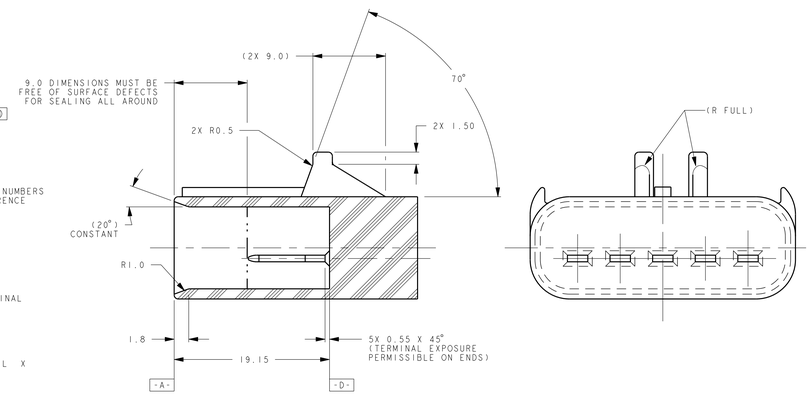

SECTION B-B

280-S-005-1-F01	NATURAL	F
280-S-005-1-C01	BROWN	C
280-S-005-1-B01	GRAY	B
280-S-005-1-A01	BLACK	A
EWCAP P/N' 5	MATING CONNECTOR COLOR	POLARIZATION TYPE

NOTE UNLESS OTHERWISE SPECIIFIED

1 ALL DIMENSIONS SHOWN IN MILLIMETERS

2 EXCEPT WHERE NOTED, DRAFT ON OUTSIDE SURFACES IS PERMISSIBLE WITHIN ALLOWABLE TOLERANCE

3 DIMENSIONING AND TOLERANCING PER ASME Y14.5M-1994

4 RADII ON ALL CORNERS SHOWN SHARP OR ALL UNSPECIFIED RADII: 0.25 EXCEPT AS NOTED

5 STANDARD COLORS FOR POLARIZATION (SEE CHART)
DEVIATION REQUIRES APPROVAL OF AUTHORIZED PERSON

6 A FULL SHROUD ON THE MATING CONNECTOR IS REQUIRED TO ENSURE THAT THE CONNECTOR HEADER POLARIZATION FEATURES (OPTIONS A THRU D) WILL FUNCTION. THE FULL SHROUD ALSO PREVENTS SCOOP DAMAGE TO THE HEADER PINS. REFER TO "SAE/USCAR-12" CONNECTOR DESIGN GUIDELINES• FOR ADDITIONAL INFORMATION

7 FOR PIN GEOMETRIC AND PLATING REQUIREMENTS, REFER TO EWCAP DWG NO. EWCAP-001, DETAIL 280-T001

CHANGE SERIAL NUMBER	LET	REVISION RECORD	DATE	DWN	CHK
071	B	27.5 MIN ENGAGEMENT LENGTH WAS 24.5 ADDED CONNECTOR ASSEMBLY VIEWS	12-14-07	FCI	SSS
-	A	INITIAL RELEASE	11-09-04	C.E.C.	JAB

TOLERANCES (UNLESS OTHERWISE SPECIFIED)
DIMENSIONS ARE IN MILLIMETERS
ANGLES ± 2°
X.X ± 0.25 X.XX ± 0.10

THIRD ANGLE PROJECTION

SCALE	DRAWN BY	CHECKED BY	DATE
4:1	RAJMOHAN P.S	JEFF BURNSIDE	11-09-04

TITLE
2.8mm DIRECT CONNECT INTERFACE
5 WAY SEALED MALE

SHEET	DRAWING NUMBER	SIZE	DO NOT SCALE DRAWING	REVISION LEVEL
1 of 1	280-S-005-1-Z01	E	COMPUTER AIDED DRAWING	B

A0 SIZE SHEET

10/21/2008