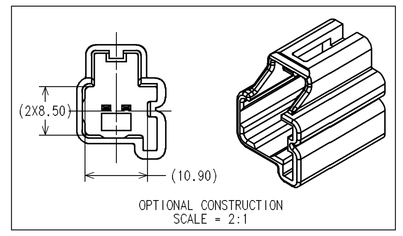

OPTIONAL CONSTRUCTION
SCALE = 2:1

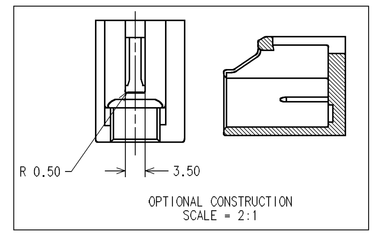

OPTIONAL CONSTRUCTION
SCALE = 2:1

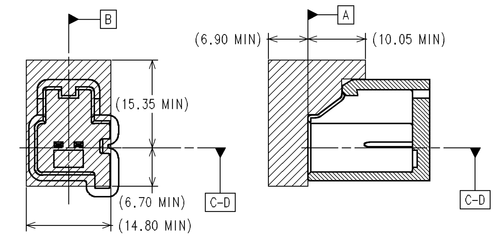

VIEWS SHOWING MATING ASSEMBLY ENVELOPE
FOR REFERENCE ONLY
SCALE = 2:1

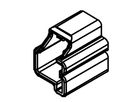

ISOMETRIC VIEW
SCALE = 1:1

NOTICE

THIS DRAWING, OR PORTIONS OF IT, ARE CONTROLLED BY THE ELECTRICAL WIRING COMPONENTS APPLICATION PARTNERSHIP (EWCAP), A SUBGROUP OF THE UNITED STATES CONSORTIUM FOR AUTOMOTIVE RESEARCH (USCAR). USCAR IS A PARTNERSHIP BETWEEN CHRYSLER GROUP LLC, FORD MOTOR COMPANY, AND GENERAL MOTORS. ANY CHANGE TO A EWCAP CONTROLLED PORTION OF THIS DRAWING, INCLUDING A "RECORD CHANGE," MUST BE APPROVED, IN WRITING, BY THE RESPONSIBLE EWCAP MEMBER FROM EACH USCAR COMPANY. EACH EWCAP MEMBER AUTHORIZED TO SIGN FOR HIS OR HER COMPANY IS RESPONSIBLE FOR OBTAINING ALL NECESSARY APPROVALS WITHIN THAT COMPANY PRIOR TO SIGNING FOR APPROVAL OF THE CHANGE. EWCAP EXPRESSLY PROHIBITS ANY PARTY FROM CHANGING EITHER ANY EWCAP CONTROLLED PORTION OF THIS DRAWING OR ANY ASSOCIATED TOOLING BEFORE RECEIVING AN APPROVAL SIGNED BY AN AUTHORIZED REPRESENTATIVE FROM EACH EWCAP PARTNER. REFERENCE TO THE SIGNED APPROVAL FORM MUST BE ENTERED IN THIS DRAWING'S CONTROL COLUMN.

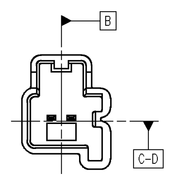

(OPTION A)
SHOWN

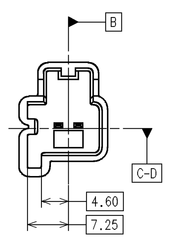

(OPTION B)

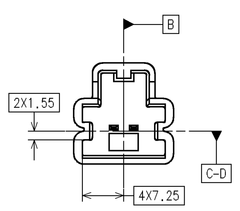

(OPTION C)

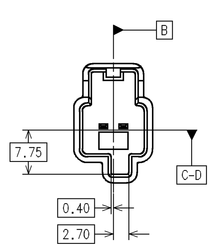

(OPTION D)

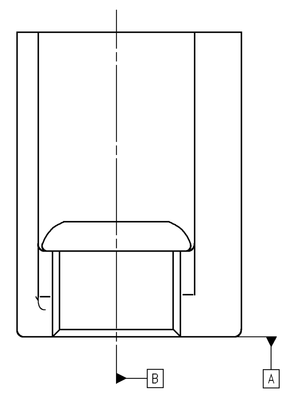

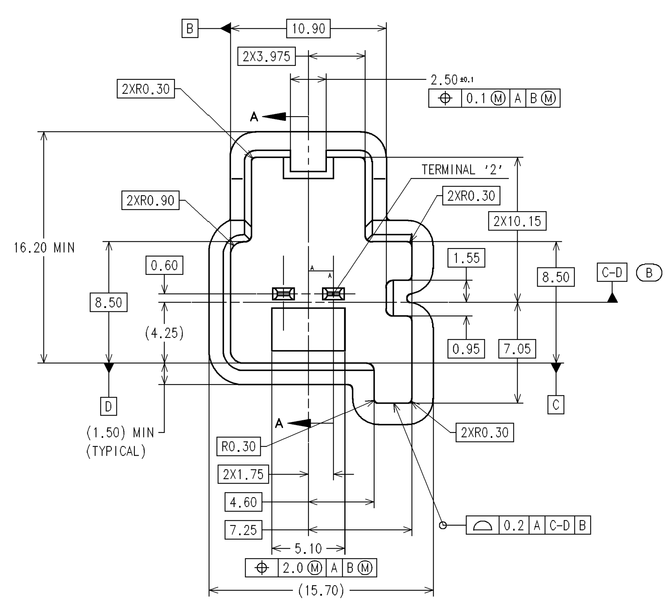

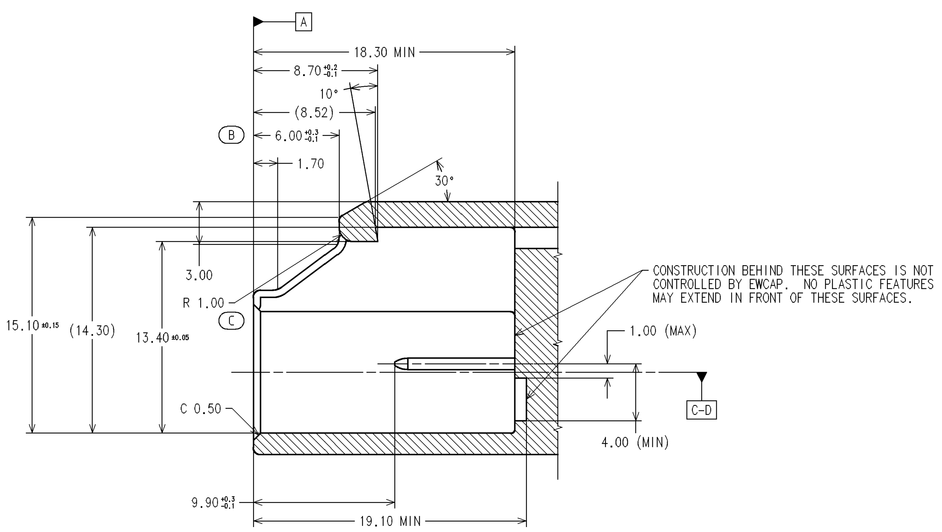

SECTION A-A

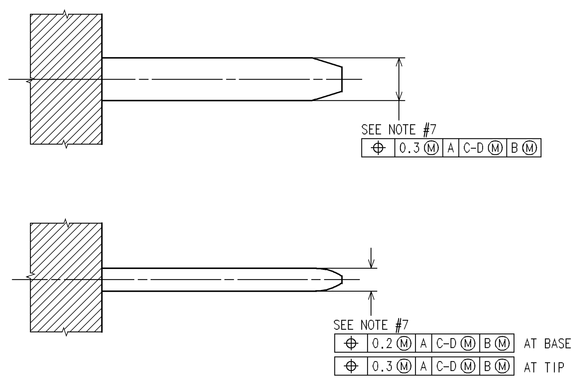

MAXIMUM TERMINAL MIS-ALIGNMENT
FROM NOMINAL POSITION

TERMINAL DETAIL
SCALE = 10:1

NOTES: UNLESS OTHERWISE SPECIFIED
1. WALL THICKNESS: (1.50).
2. ALL UNSPECIFIED RADII: 0.25.
3. 0.25 MAXIMUM RADIUS PERMISSIBLE ON EDGES SHOWN AS SHARP.
4. TOOL DRAFT PERMISSIBLE WITHIN PROFILE TOLERANCE ONLY.
5. REFER TO SAE/USCAR-12 "WIRING COMPONENT DESIGN GUIDELINES."
6. STANDARD COLORS FOR POLARIZATIONS - DEVIATION REQUIRES APPROVAL OF AUTHORIZED PERSON.
7. PLEASE REFER TO EWCAP-001 FOR BLADE DETAILS.

150-U-002-1-D01	D	GREEN
150-U-002-1-C01	C	BROWN
150-U-002-1-B01	B	GREY
150-U-002-1-A01	A	BLACK
EWCAP P/N	OPTION	MATING CONNECTOR COLOR

CHANGE SERIAL NUMBER	LET	REVISION RECORD	DATE	DWN	CHK
084	C	CHANGED RADIUS	07.13.10	P.C.	J.R.
077	B	ADDED MISSING DIM. CO-DATUM	04.24.09	J.G.	J.R.
–	A	RELEASED	02.11.03	R.W.	L.K.

TOLERANCES (UNLESS OTHERWISE SPECIFIED)
DIMENSIONS ARE IN MILLIMETERS
ANGLES ± 0° 30'
.X ± .25 .XX ± .13

THIRD ANGLE PROJECTION

EWCAP

SCALE	DRAWN BY	CHECKED BY	DATE
5:1	R. WONG	L. KIM	02.11.03

TITLE
1X2 UNSEALED INTERFACE
1.50MM CONNECTORS

SHEET	DRAWING NUMBER	SIZE	DO NOT SCALE DRAWING COMPUTER AIDED DRAWING	REVISION LEVEL
1 of 1	150-U-002-1-Z01	E		C

YAZAKI NORTH AMERICA
7283-5530

E SIZE SHEET

150-U-002-1-Z01